WM-W800

SERVICE MANUAL

US Model
Canadian Model
AEP Model
UK Model

SPECIFICATIONS

Tape track 4-track 2-channel stereo
Fast winding time Approx. 3 min. with Sony cassette HF-60
Frequency response Deck A (Dolby NR OFF): 40–15,000 Hz
Deck B: 60–9,000 Hz

Input
External microphone input (stereo minijack) (PLUG IN POWER)
sensitivity 0.35 mV (–67 dB) for low impedance microphone

Output
Headphones jack (stereo minijack)
load impedance 8–300 ohms

Power output
8 mW + 8 mW (at 10% harmonic distortion) at dc operation

Power requirements 3 V dc
Two IEC designation R6 batteries (size AA)
DC IN 3 V jack accepts:
Sony AC-D2 ac power adaptor (optional)
(US, Canadian) . . .120 V ac, 60 Hz
(AEP). . . . . .220 V ac, 50 Hz
(UK) . . . . . .240 V ac, 50 Hz
Sony EBP-500 battery case (optional) for use on two IEC designation R20 batteries (size D)
Sony DCC-70 car battery cord (optional) for use with 12 V car battery

Battery life (EIAJ) (hours)

Batteries	Tape playback	Recording (microphone)
Supplied Sony SUM-3(NS) New Super batteries	Approx. 6	Approx. 4
Sony Eveready AM3 alkaline batteries	Approx. 12	Approx. 8

For maximum performance we recommend the use of alkaline batteries.

Dimensions
Approx. 116 × 88.7 × 38.2 mm (w/h/d) incl. projecting parts and controls ($4\frac{5}{8} \times 3\frac{1}{2} \times 1\frac{9}{16}$ inches)
Approx. 114 × 84.8 × 36.2 mm (w/h/d) not incl. projecting parts and controls ($4\frac{1}{2} \times 3\frac{3}{8} \times 1\frac{7}{16}$ inches)

Weight
Approx. 350 g (12.4 oz) incl. batteries, not incl. other accessories

Tape Transport Mechanism Type	MT-W800(A)-25 (DECK A) MT-W800(B)-25 (DECK B)

FEATURES

- **Double-cassette WALKMAN** which can copy a recorded tape on deck A to a tape on deck B.
- **Small-size one-point stereo microphone** supplied.
- **Dolby NR system** reduces tape hiss noise in the playback mode on deck A.
- **PB EQ (playback equalizer) selector** on deck A for optimum playback with standard tapes as well as high-performance metal tapes.
- **MIC (PLUG IN POWER) jack** supplies power to the supplied microphone.

'Dolby' and the double-D symbol are the trade marks of Dolby Laboratories Licensing Corporation. Noise reduction system manufactured under license from Dolby Laboratories Licensing Corporation.

STEREO CASSETTE CORDER

SONY®

SERVICING NOTES

Replacing chip components

All chip components should be connected and disconnected, using a tapered soldering iron [temperature of the iron tip: less than 280°C (536°F)], a pair of tweezers and braided wire.

Precautions for replacement

1. **Do not disconnect the chip component forcefully. Otherwise, the pattern may peel off.**
2. **Never re-use a disconnected chip component. Dispose of all old chip components.**
3. **To protect the chip component, heating time for attaching the component should be within 3 seconds.**

○ Removing chip components

(1) Removing solder at electrode

Remove the solder at the electrode, using a thin braided wire. Do not remove the solder of the part (chip component) attached adjacent to the electrode.

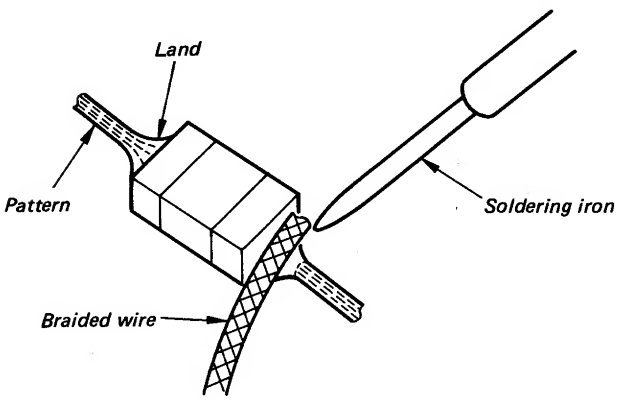

(2) Disconnecting chip components

Turn the tweezers with the soldering iron alternately applied to both electrodes, and the chip component will be disconnected. Take careful precautions while disconnecting, because if the chip component is forcefully removed the land may peel off.

Never re-use a disconnected chip component.

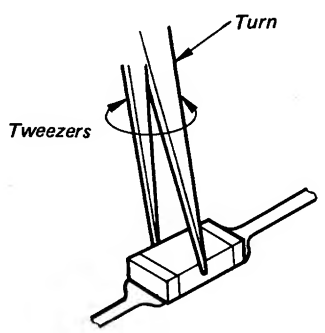

(3) Smoothing the soldered surface

After disconnecting the chip component, remove the solder by using a braided wire to smooth the land surface.

○ Connecting chip components

The value of chip components is not displayed on the main body. Take due precautions to avoid mixing new chip components with other ones.

(1) Applying solder to land on one side

Apply a thin layer of solder to the land on one side where the chip component is to be connected. Too much solder may cause bridging.

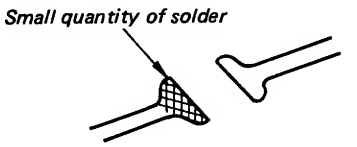

(2) Speedy soldering

Hold the chip component at the desired position, using tweezers, and apply the soldering iron in the arrow-marked direction. To protect the chip component, heating time should be within 3 seconds.

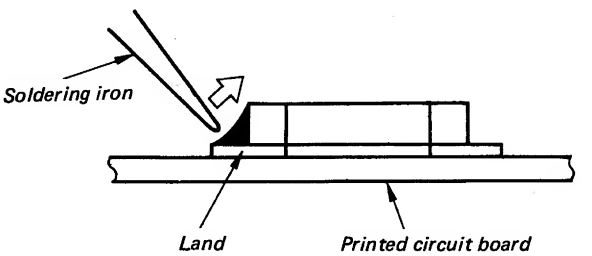

(3) Speedy soldering of electrode on the other side

Solder the electrode on the other side in the same way as in (2) above.

PARTS IDENTIFICATION

Deck A

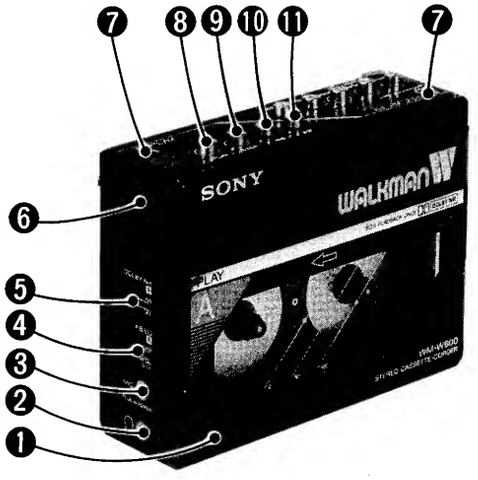

Deck B

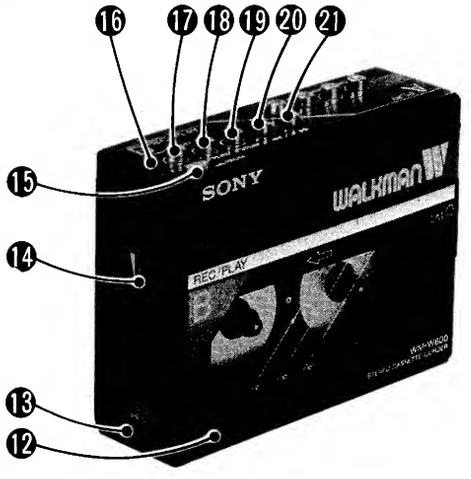

❶ Cassette compartment (deck A)
❷ ∩ Headphone jack (stereo minijack)
❸ MIC (microphone) (PLUG IN POWER) jack (stereo minijack)
❹ PB EQ (playback equalizer) selector
❺ ISS (Inteference Suppress Switch)/DOLBY NR selector
❻ PUSH OPEN button
❼ Battery compartment

operation buttons on deck A

❽ PLAY (playback) button
❾ STOP button
❿ ◀◀ (fast-forward) button
⓫ ▶▶ (rewind) button

⓬ Cassette compartment (deck B)
⓭ DC IN 3 V (external power input) jack
⓮ VOL (volume) control
⓯ PAUSE switch
⓰ OPR/BATT (operation/battery) indicator

operation buttons on deck B

⓱ REC (record) button
⓲ PLAY (playback) button
⓳ STOP button
⓴ ◀◀ (fast-forward) button
㉑ ▶▶ (rewind) button

SECTION 1
BLOCK DIAGRAM

1-1. BLOCK DIAGRAM

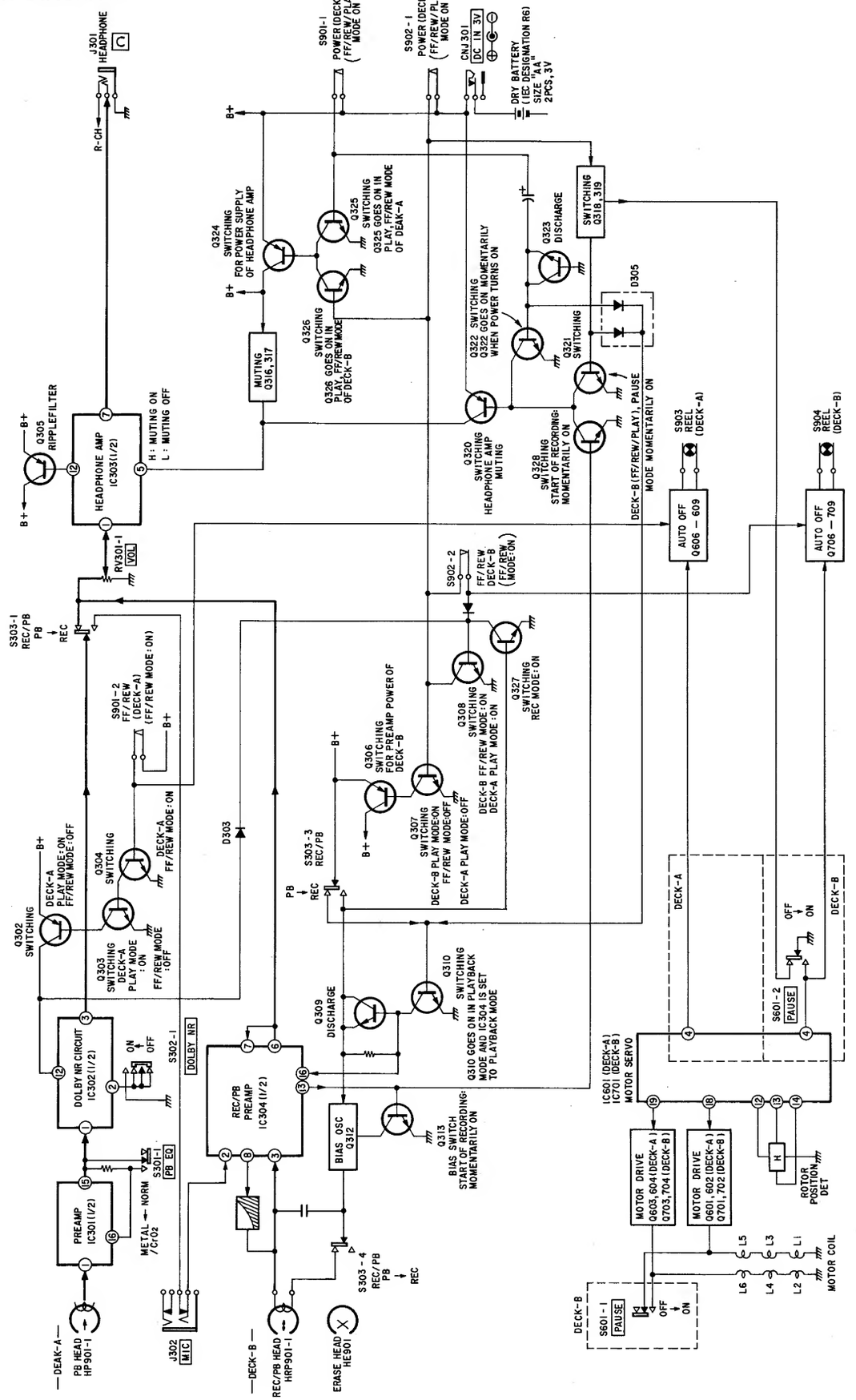

SECTION 2
DISASSEMBLY

- Follow the disassembly procedure in the numerical order given.
- Assemble in the reverse order of disassembling.

CONTROL PANEL COVER

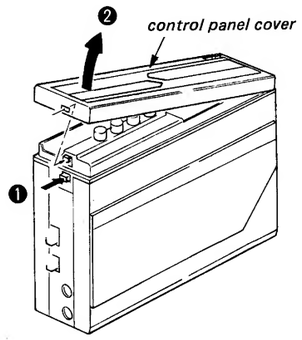

CASSETTE LID (A)

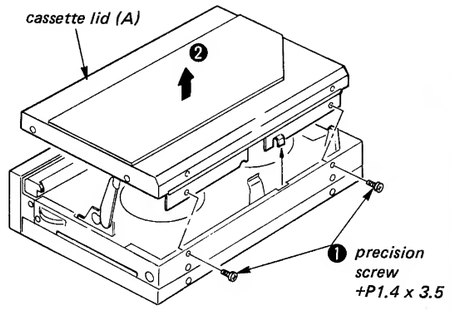

CONTROL PANEL

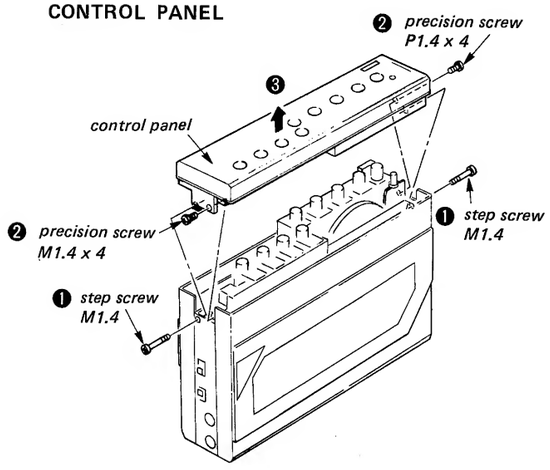

CASSETTE LID (B)

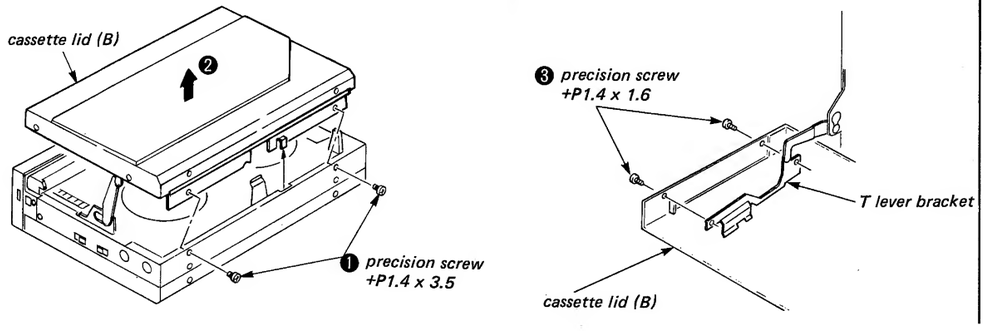

SIDE PANEL

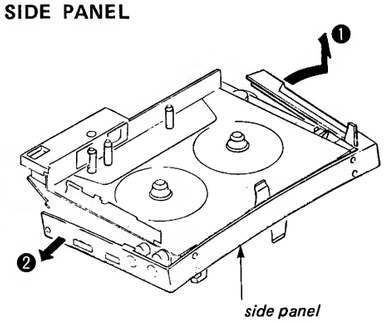

DECK B

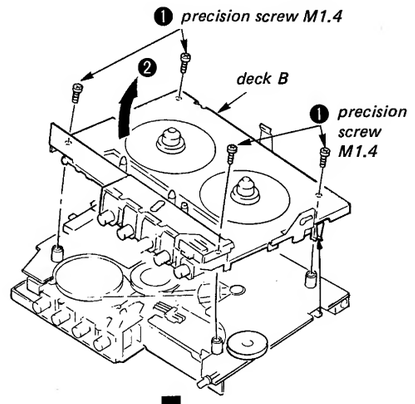

AUDIO BOARD/DECK A

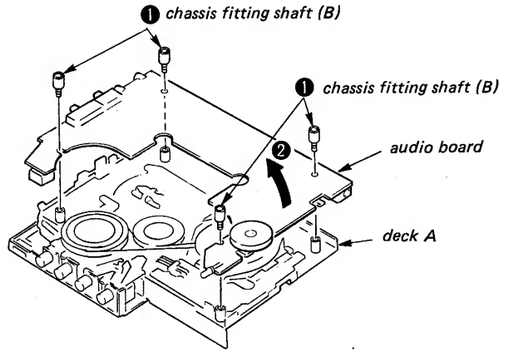

FLYWHEEL

Note:
Be sure to replace the capstan bushing with a new one after removing it.

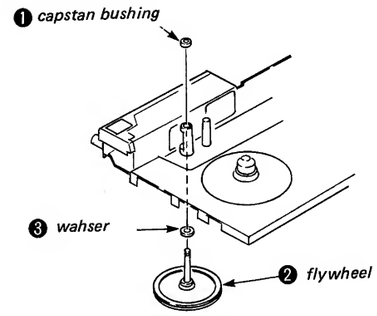

MOTOR/SERVO BOARD

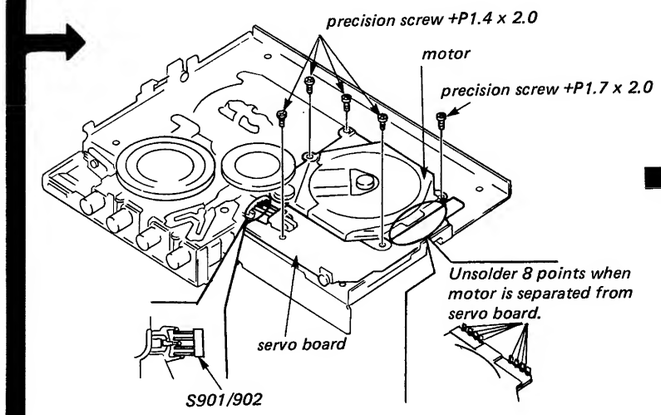

BELT

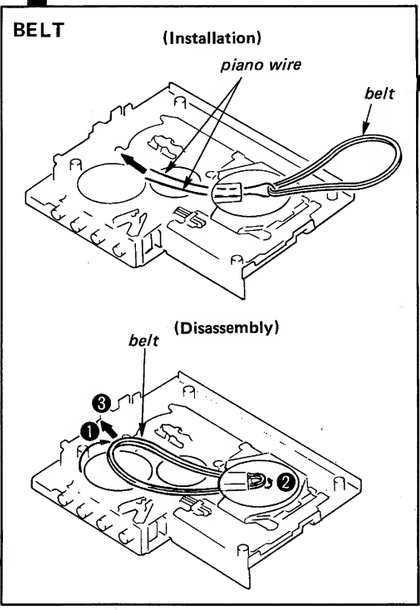

F/R LEVER (C)

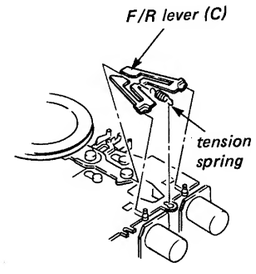

REC LEVER (Deck B only)

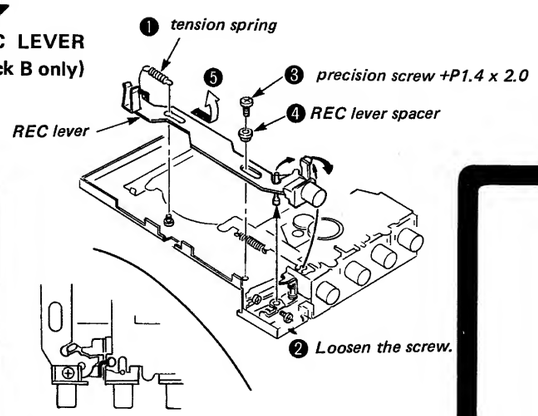

SLEEVE

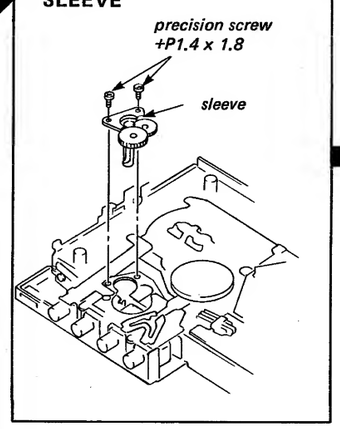

CONTROL PLATE

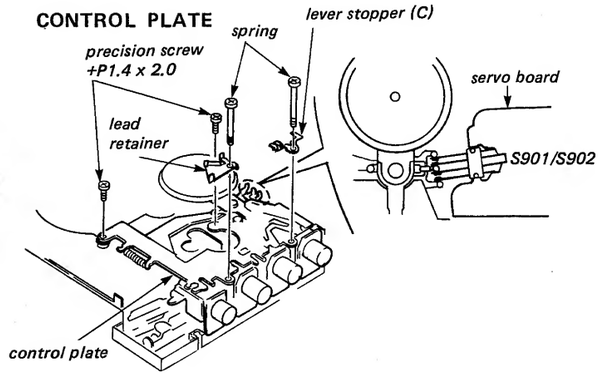

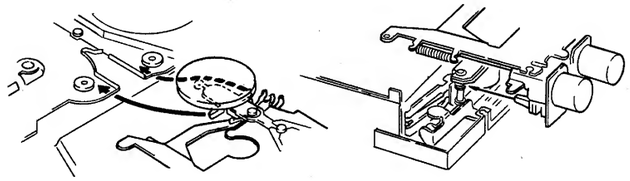

Installation (1)

Installation (2)

BUTTON GUIDE

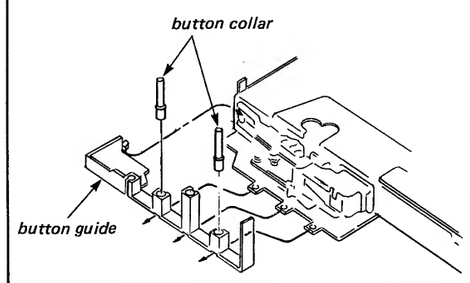

HEAD CHASSIS (Deck A)

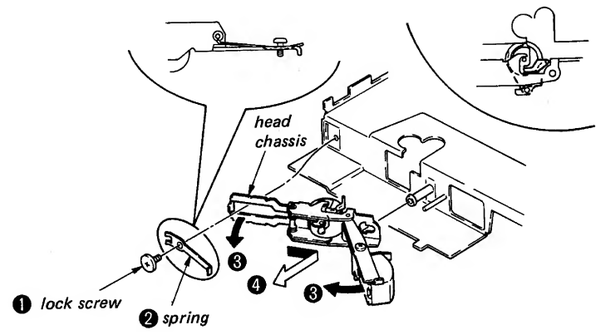

(Installation)

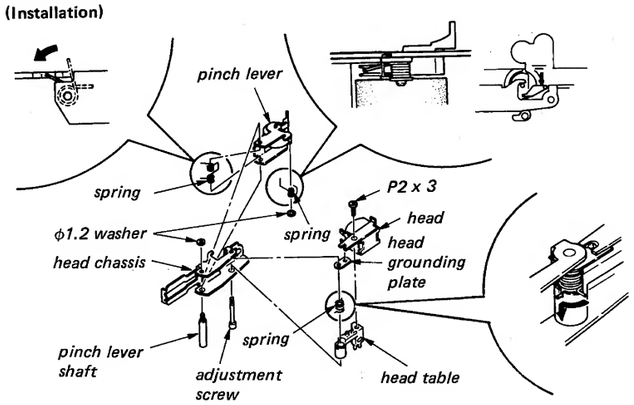

(Head Wiring)

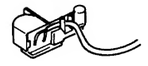

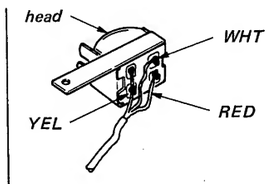

T REEL

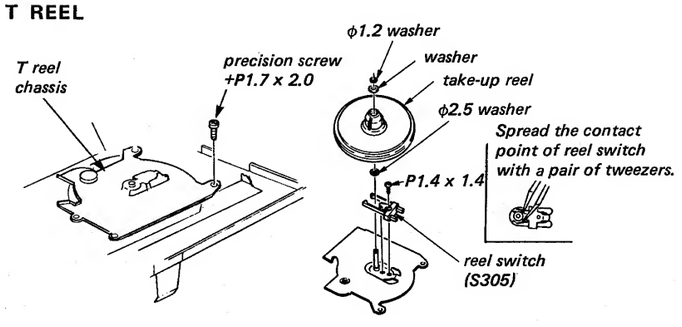

HEAD CHASSIS (Deck B)

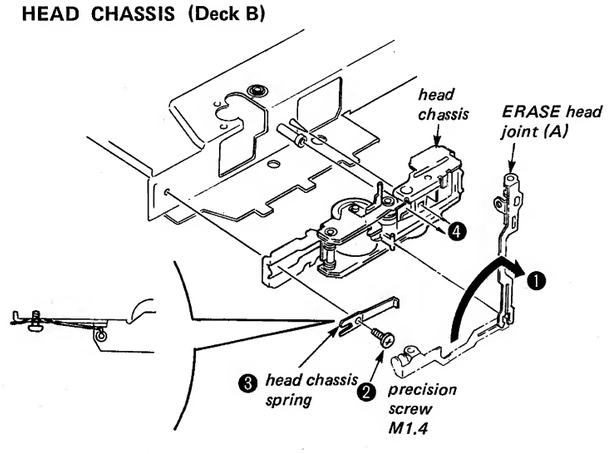

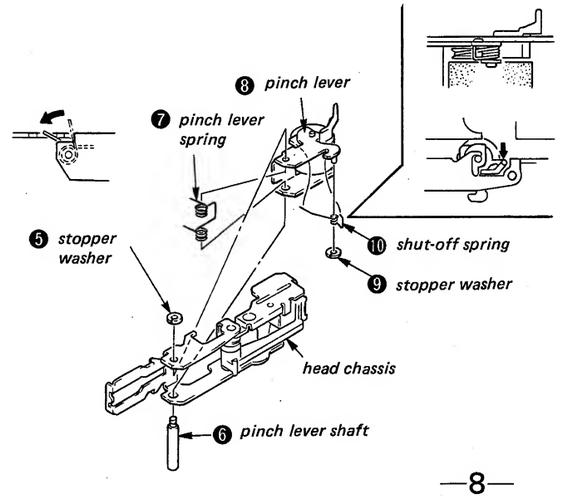

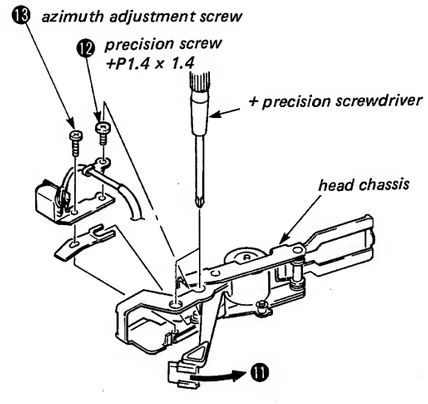

SECTION 3
ADJUSTMENTS

PRECAUTION

1. Clean the following parts with a denatured-alcohol-moistened swab:

REC/PB head	pinch roller
capstan	rubber belts
erase head	

2. Demagnetize the REC/PB head with a head demagnetizer.
   (Take care not to demagnetize the erase head.)
3. Do not use a magnetized screwdriver for the adjustments.
4. The adjustments should be performed with the rated power supply voltage (2.5V) unless otherwise noted.

Pinch Roller Pressure Measurement

Procedure:

– playback mode –

1. Pull the spring scale in the direction of the arrow.
2. Slowly return the pinch roller and read the spring scale just when the pinch roller starts to rotate.

Specifications:

150 ± 20g

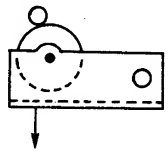

3-1. MECHANICAL ADJUSTMENTS

Torque Measurement

Perform with 2.5V DC power.

	Torque meter	Meter reading
FWD	CQ-102C	20 – 40 g-cm (0.28 – 0.56 oz-inch)
FF, REW	CQ-201B	More than 60 g-cm (More than 0.83 oz-inch)
Back Tension	CQ-102C	0 – 2.5 g-cm (0 – 0.034 oz-inch)
Tape Pulling Force	CQ-403	More than 45 g-cm (More than 0.62 oz-inch)

Thrust Clearance Adjustment

	Thrust clearance	Adjustment Parts (Refer to exploded views and parts list.)
Motor wheel	0.2mm	No. 114
Take-up reel	0.05–0.15mm	No. 108/110/111
Supply reel	0.05–0.15mm	No. 117
Reverse wheel	0.05–0.15mm	No. 152/154

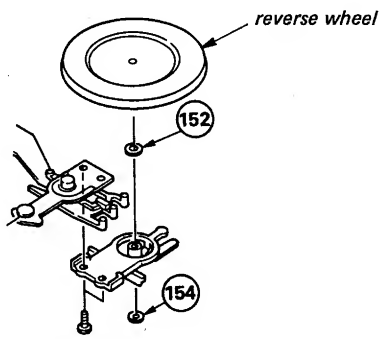

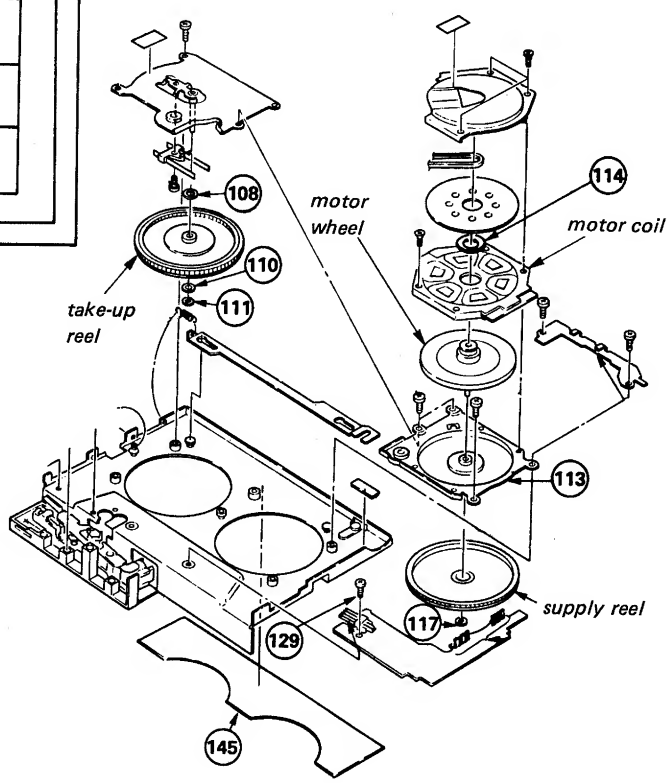

3-2. ELECTRICAL ADJUSTMENTS

Record/Playback Head Azimuth Adjustment

Procedure:

1. Mode: playback

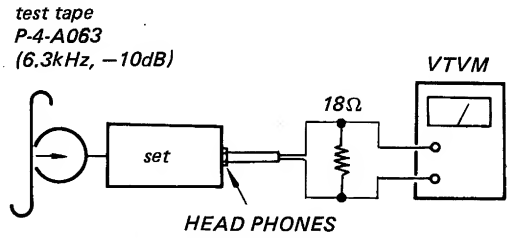

2. Turn the adjustment screw for the maximum output levels. If these levels do not match, turn the adjustment screw until both of output levels match together within 0.5dB.

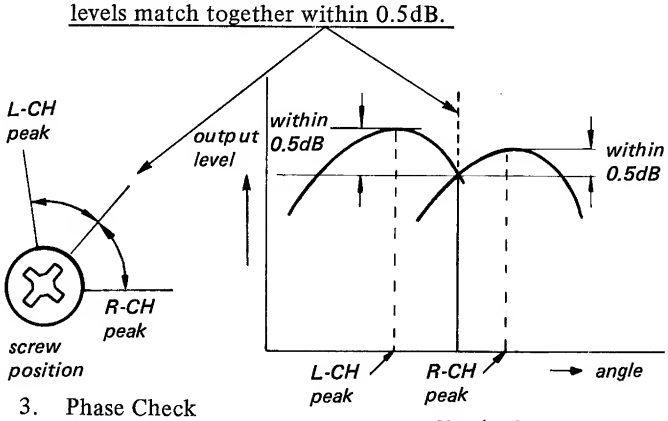

3. Phase Check
   Mode: playback

Note) After the adjustments, do not apply locking compound.

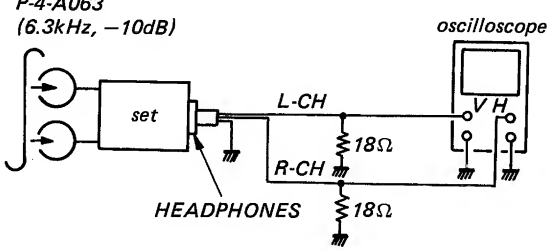

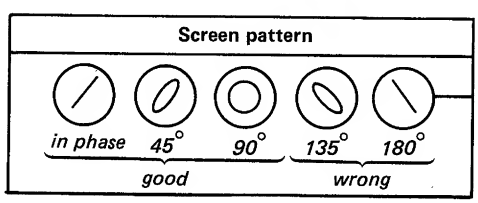

Tape Speed Adjustment

Setting:

VOLUME control: mechanical mid

Procedure:

Mode: playback

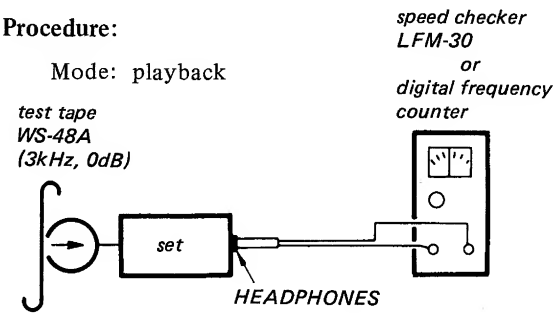

Specification:

Deck A	3,000 – 3,020Hz (3,010 ±0.3%)
Deck B	2,980 – 3,000Hz (2,990 ±0.3%)

Adjustment Location:

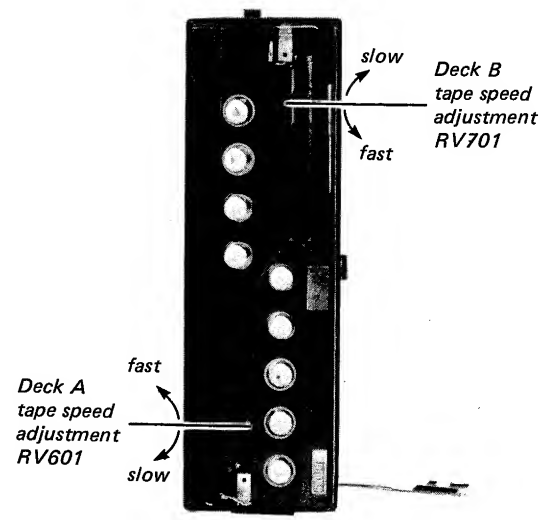

Adjustment Location:

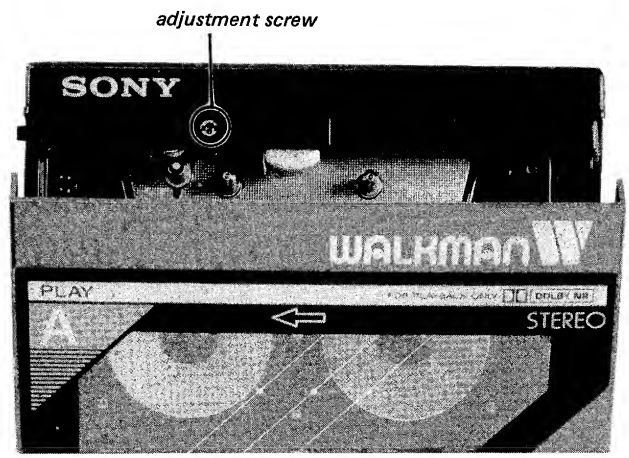

Dolby NR Level Adjustment

Setting:

TAPE switch:	NORM
DOLBY NR switch:	off
VOLUME control:	minimum

test tape
P-4-L300
(315Hz, 0dB)

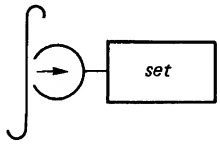

Procedure:

Adjust RV101 (L-CH), RV201 (R-CH) to obtain −27.7dB ±0.5dB (0.030V to 0.033V) output level.

Adjustment Location: Audio board

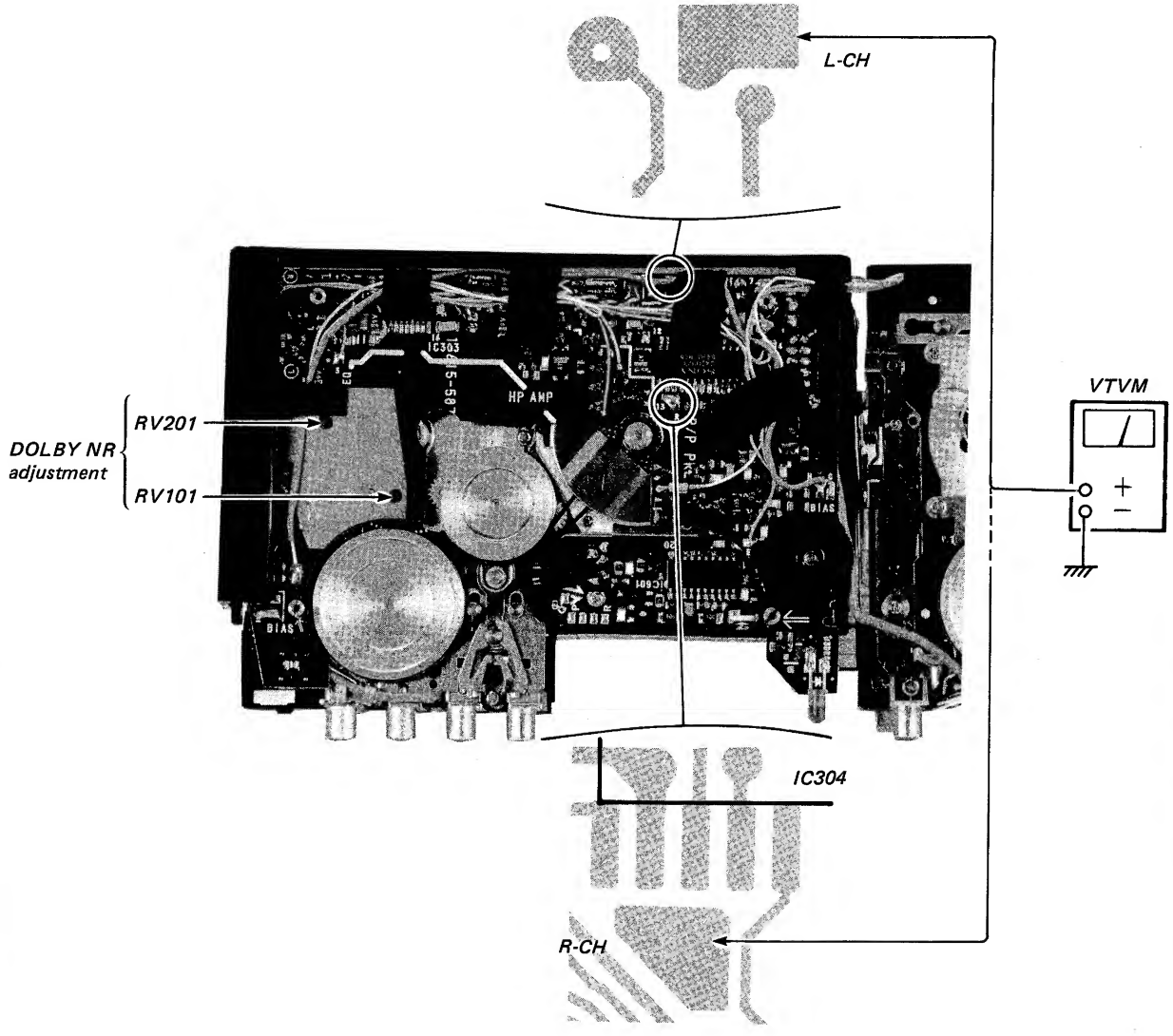

RECORD BIAS ADJUSTMENT

Setting:

VOLUME control: MECHANICAL MID

Procedure:

1. Recording Mode (Deck B)

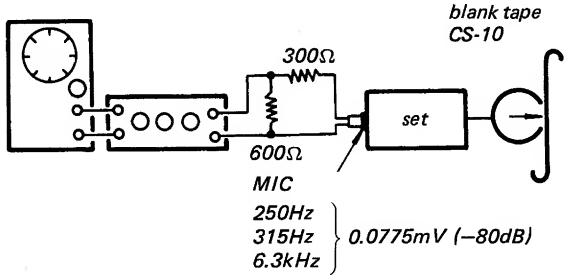

2. Playback Mode (Deck B)

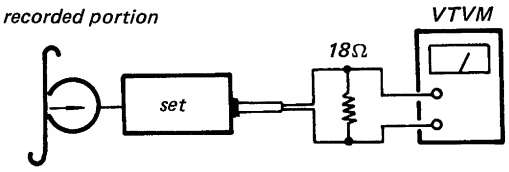

3. Specifications

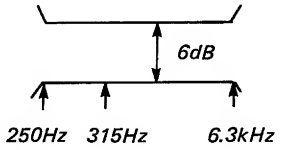

If necessary, change resistor connection and repeat the above step 1 through 3.

○ mark: pattern bridge

R316	R317	6.3kHz output level
○	○	LOW ↕ HIGH
○		
	○	

Adjustment Location: Audio board

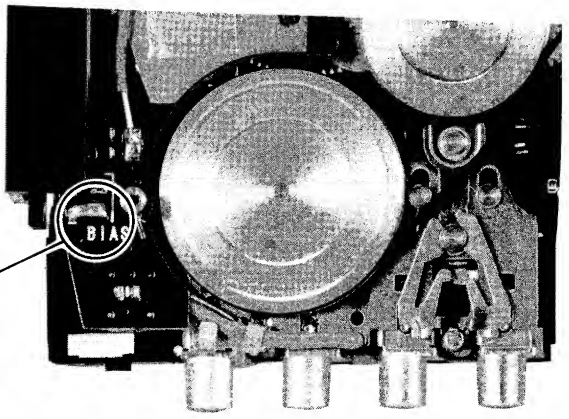

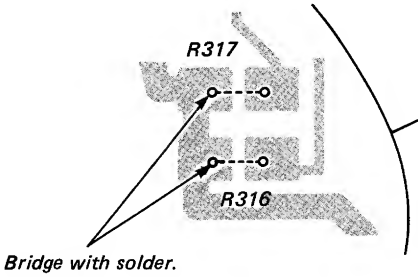

4-1. MOUNTING DIAGRAM – AUDIO SECTION –

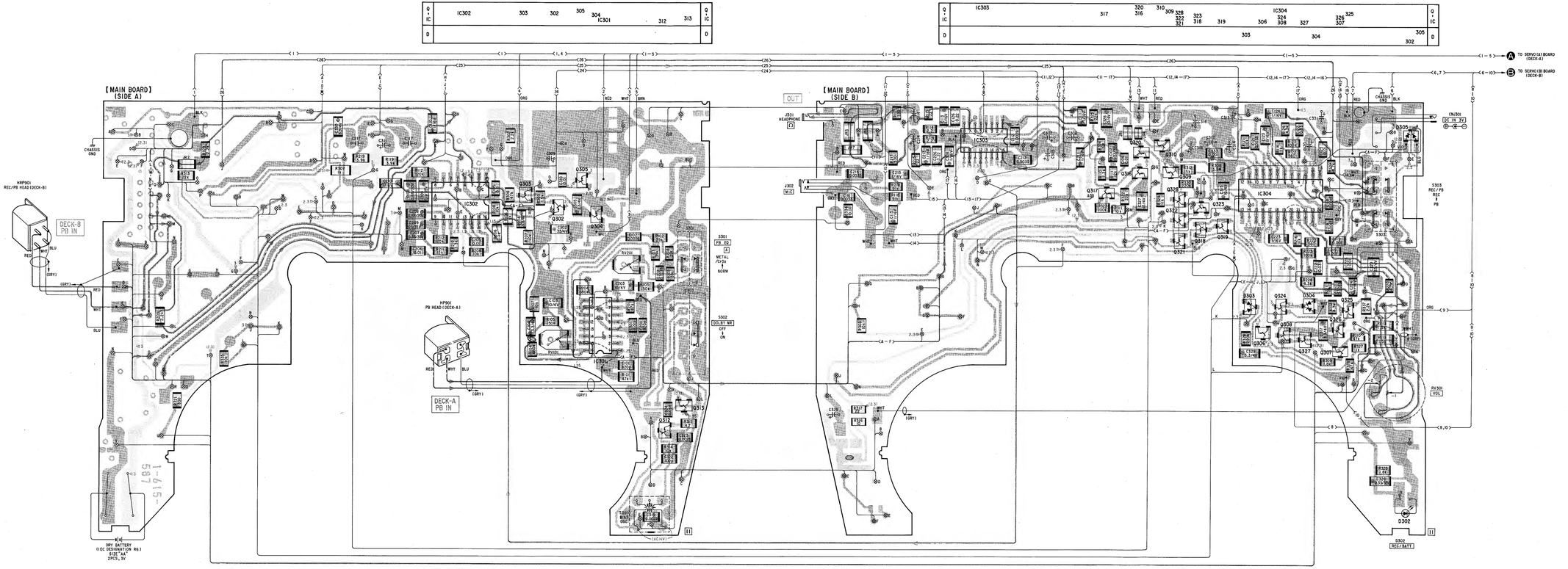

Note:

- Color code of sleeving over the end of the jacket.

- ●—: parts extracted from the conductor side.
- ⊣⊢ : indicates side identified with part number.
- ⊗ : Through hole.
- : signal path
- : L-CH signal path
- : R-CH signal path
- : B + pattern

4-2. SCHEMATIC DIAGRAM — AUDIO SECTION —

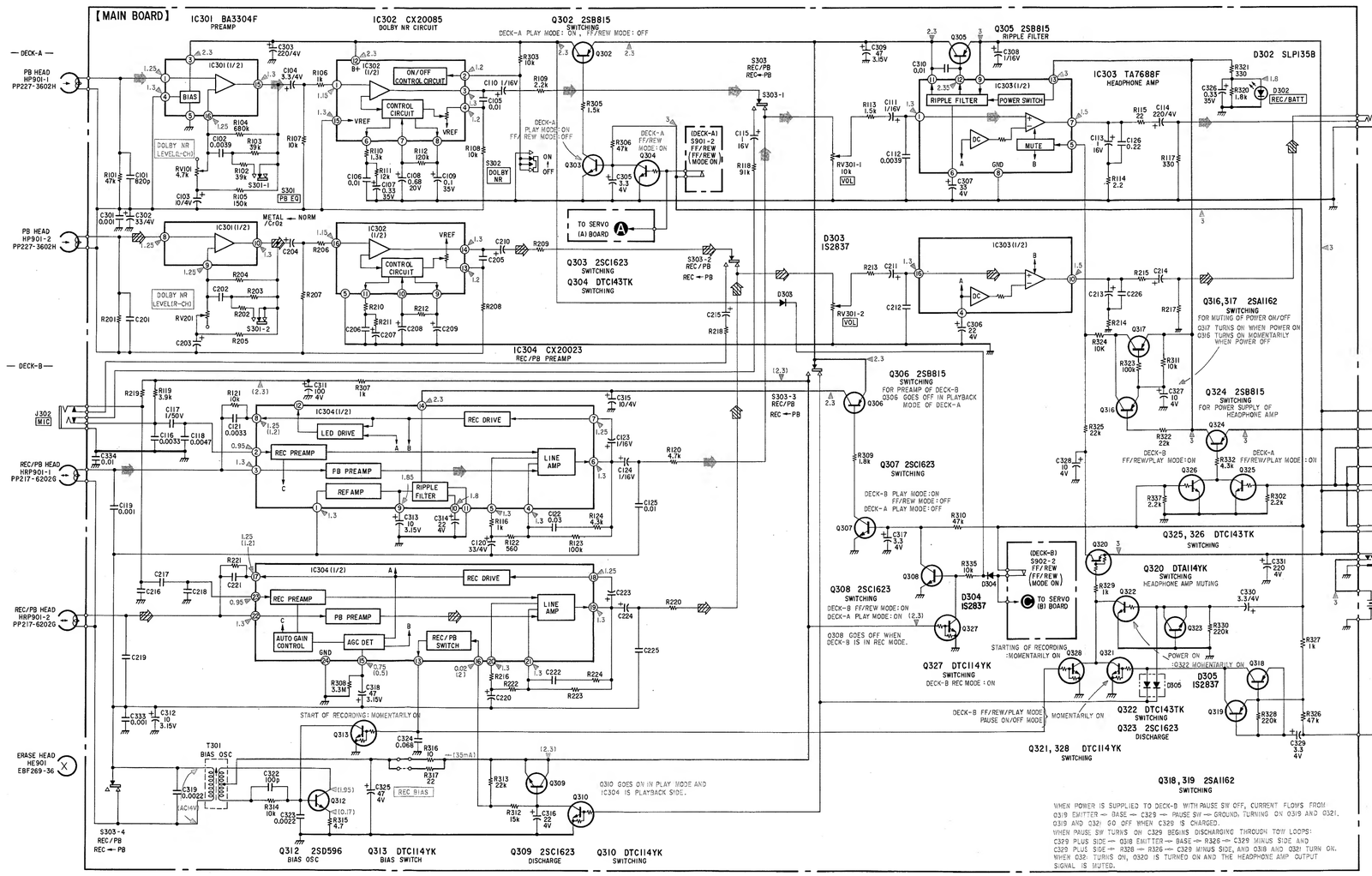

Note:

- All capacitors are in μF unless otherwise noted. pF: μμF 50 WV or less are not indicated except for electrolytics and tantalums.
- All resistors are in Ω and ¼W or less unless otherwise specified.
- ▨: signal path.
- ▨: signal path.
- Components for right channel have same values as for left channel. Reference numbers are coded from 200.
- ▭: B+ bus.
- ▭: adjustment for repair.
- Voltages are dc with respect to ground unless otherwise noted.
- Readings are taken under no-signal conditions with a VOM (50kΩ/V).
  ( ) : REC
- Voltage variations may be noted due to normal production tolerances.
- Power voltages is DC 3V and fed with regulated dc power supply from DC JACK.
  Voltages are dc with respect to ground in PB mode.
  Voltage variations may be noted due to normal production tolerances.
- Switch

Ref. No.	Switch	Position
S301	PB EQ	NORM
S302	DOLBY NR	OFF
S303	REC/PB	PB
S901-1	POWER (DECK-A)	OFF
S901-2	FF/REW (DECK-A)	OFF
S902-1	POWER (DECK-B)	OFF
S902-2	FF/REW (DECK-B)	

- Semiconductor Lead Layouts

BA3304F
CX20085
TA7688F

CX20023

CX20123

RD2.2E-B

1S2837

SLP135B

2SA1162
2SB624-BU4
2SB815
2SC1623
2SD596
DTC114YK
DTC143TK

4-3. MOUNTING DIAGRAM
– SERVO SECTION –

Note:

- ●—: parts extracted from the conductor side.
- ⊗ : Through hole.
- ▒: B + pattern

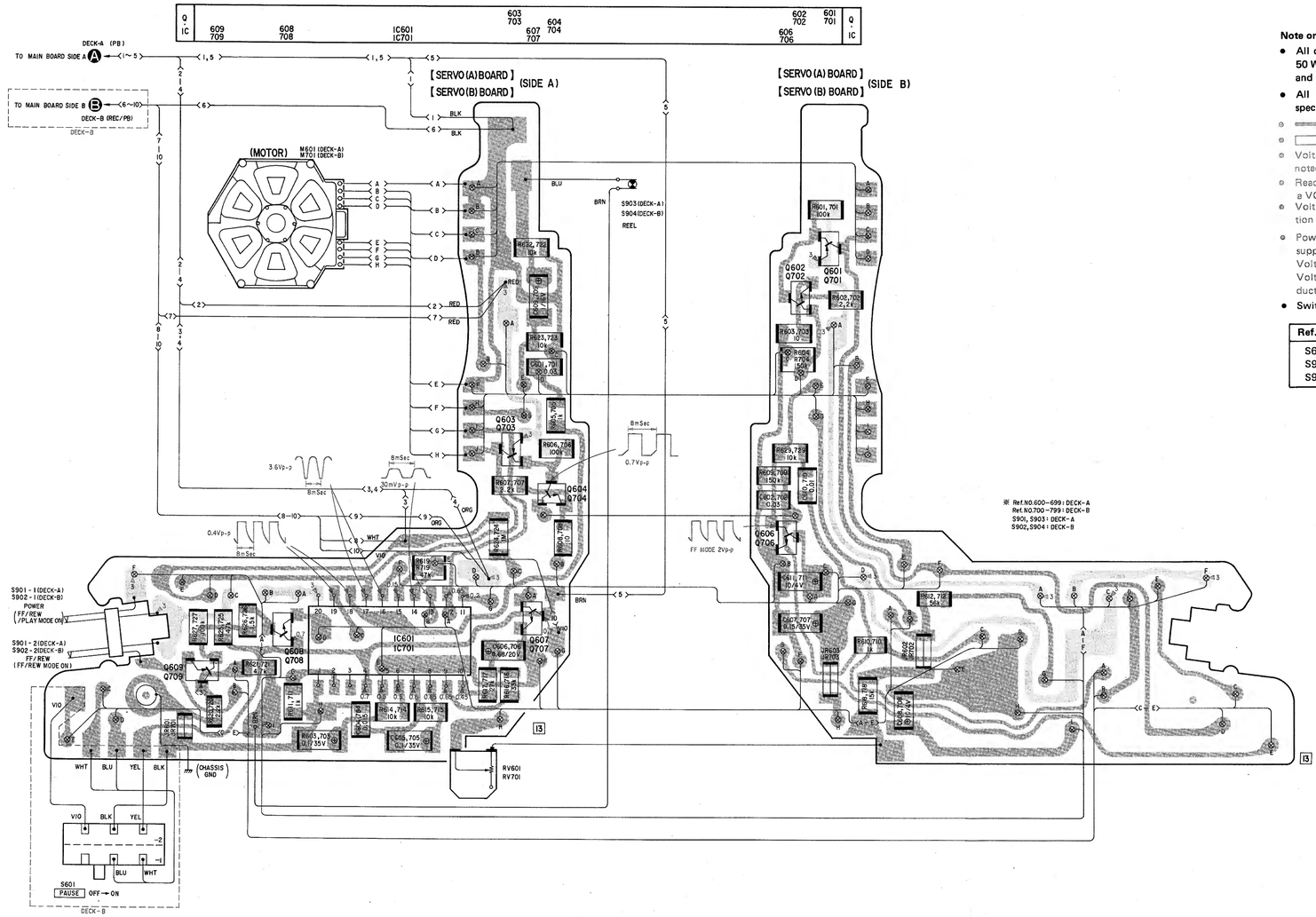

Note on schematic diagram:

- All capacitors are in μF unless otherwise noted. pF: μμF 50 WV or less are not indicated except for electrolytics and tantalums.
- All resistors are in Ω and ¼W or less unless otherwise specified.
- ▬▬ : B+ bus.
- ▭ : adjustment for repair.
- Voltages are dc with respect to ground unless otherwise noted.
- Readings are taken under no-signal conditions with a VOM (50kΩ/V).
- Voltage variations may be noted due to normal production tolerances.
- Power voltage is DC 3V and fed with regulated dc power supply from DC JACK.
  Voltages are dc with respect to ground in PB mode.
  Voltage variations may be noted due to normal production tolerances.
- Switch

Ref. No.	Switch	Position
S601	PAUSE	OFF
S903	REEL (DECK-A)	–
S904	REEL (DECK-B)	–

4-4. SCHEMATIC DIAGRAM (Refer to page 22 for notes.)
– SERVO SECTION –

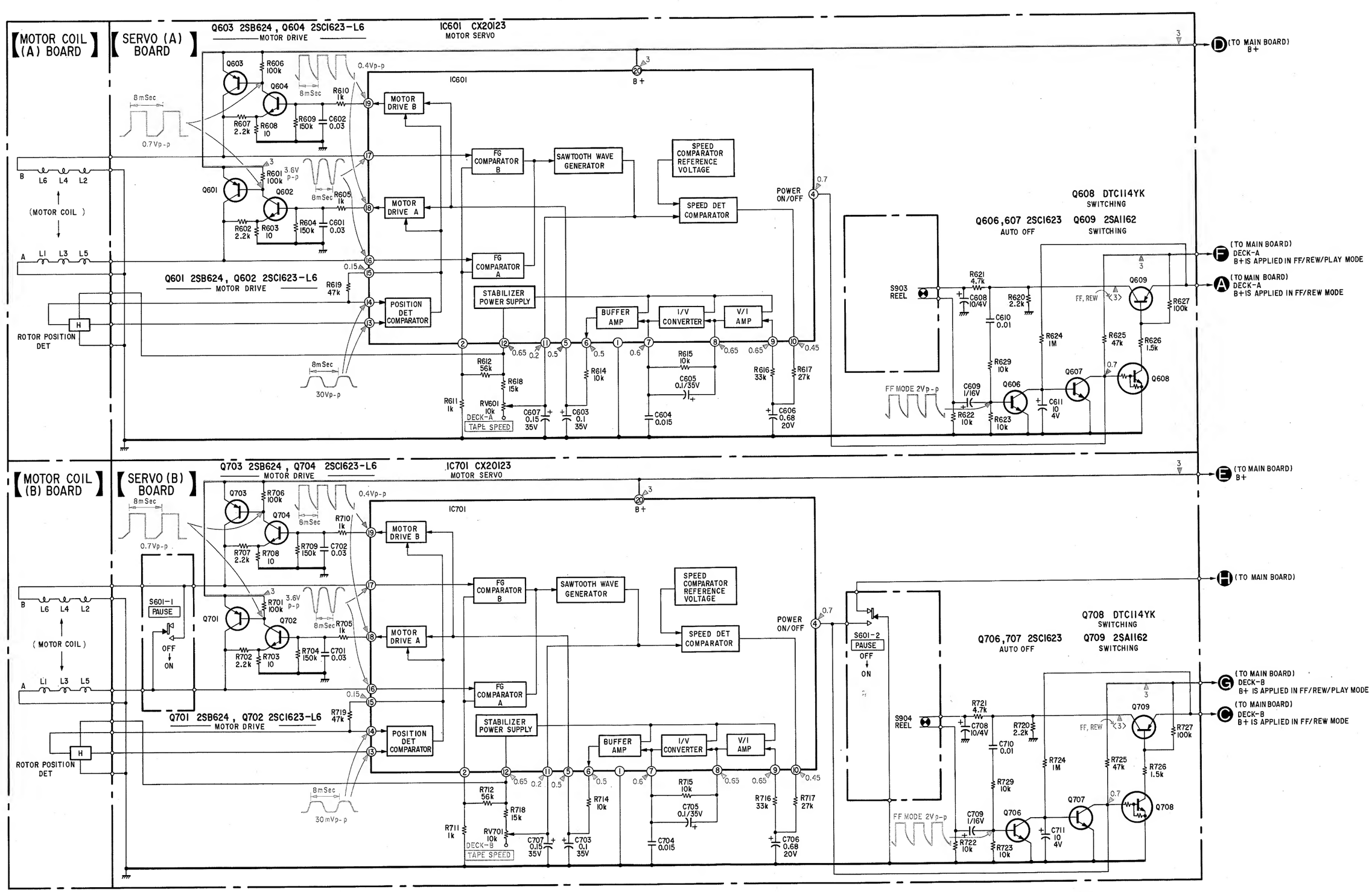

REVISED

SECTION 5
EXPLODED VIEWS AND PARTS LIST

NOTE:
- The mechanical parts with no reference number in the exploded views are not supplied.
- Items marked " ★ " are not stocked since they are seldom required for routine service. Some delay should be anticipated when ordering these items.
- The construction parts of an assembled part are indicated with a collation number in the remark column.

(1)

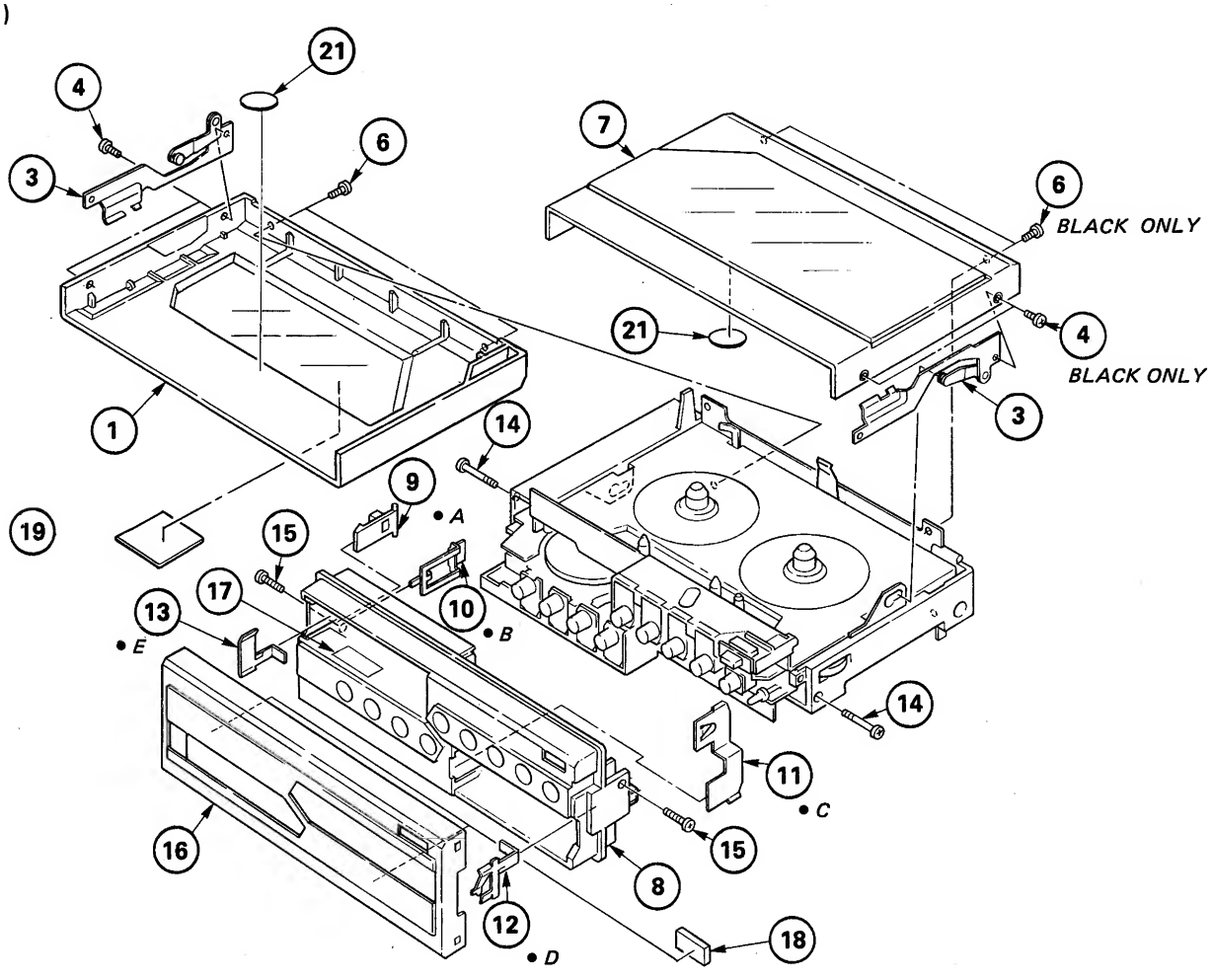

No.	Part No.	Description	Remarks
1	X-3325-115-1	(BLACK)....LID (A) ASSY, CASSETTE	
	X-3325-116-1	(SILVER)...LID (A) ASSY, CASSETTE	
3	X-3325-101-1	BRACKET ASSY, T LEVER	
4	7-627-850-47	(SILVER)...SCREW, PRECISION +P 1.4X1.6	
	7-627-850-48	(BLACK)....SCREW, PRECISION +P 1.4X1.6	
6	7-627-850-17	(SILVER)...SCREW, PRECISION +P 1.4X2.5	
	7-627-850-18	(BLACK)....SCREW, PRECISION +P 1.4X2.5	
7	X-3325-105-1	LID (B) ASSY (BLACK), CASSETTE	
8	A-3043-104-A	PANEL ASSY, CONTROL	
9	3-325-124-01	CLAW, LOCK, COVER	
10	3-325-109-01	SPRING	
11	3-325-125-01	TERMINAL (A), BATTERY	
12	3-325-107-01	TERMINAL(B), BATTERY	
13	3-325-102-01	TERMINAL(C), BATTERY	
14	3-325-117-01	SCREW (M1.4), STEP, SPECIAL	
15	7-627-850-68	SCREW, PRECISION +P 1.4X4	
16	3-325-128-11	COVER, CONTROL PANEL	
17	3-527-213-00	LABEL, SERIAL NUMBER	
18	9-911-815-01	CUSHION	
19	*3-703-710-01	STICKER, SONY SYMBOL (12)	
21	*3-323-130-11	CUSHION, CASSETTE	

(2)

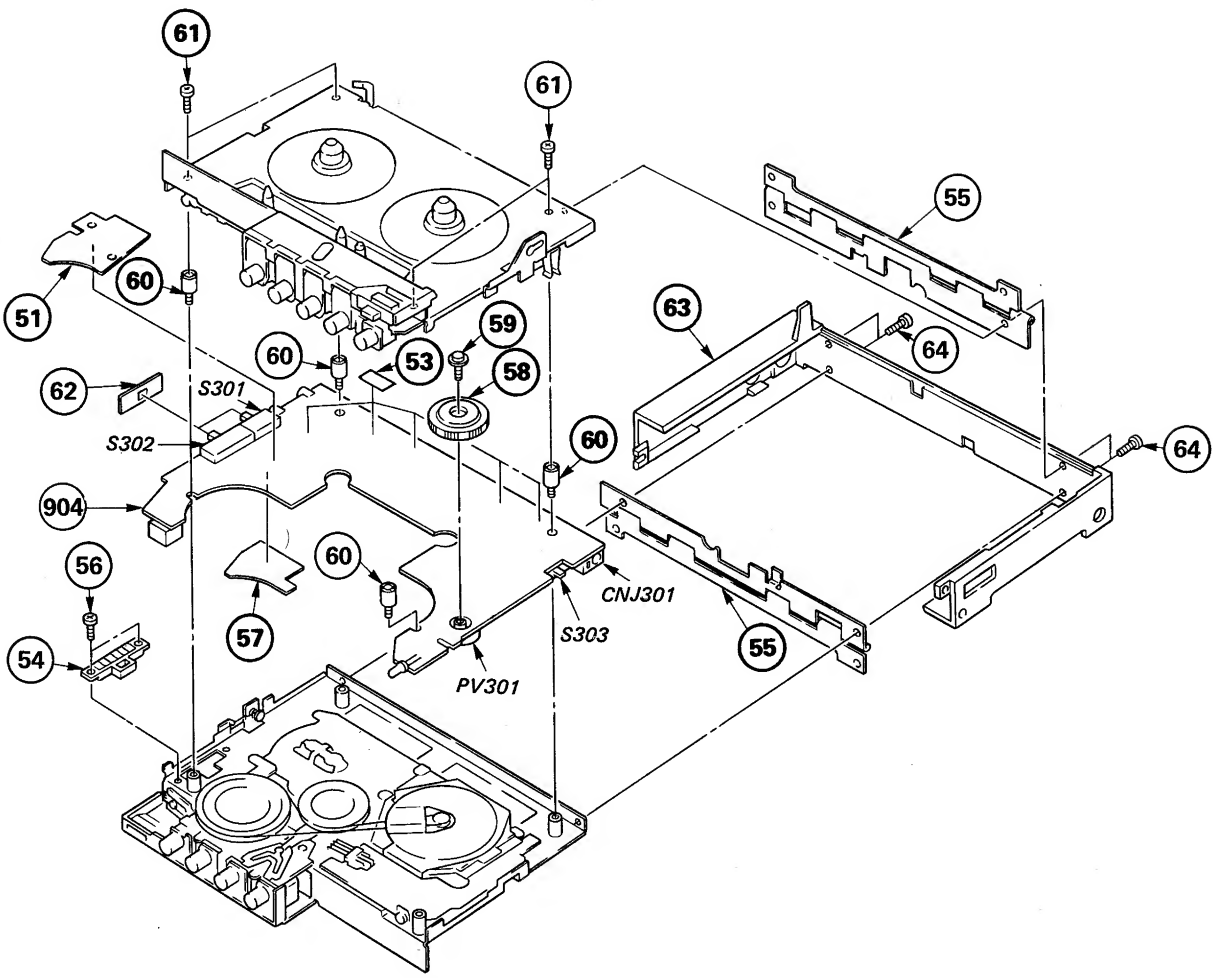

No.	Part No.	Description	Remarks
51	*3-325-158-01	PLATE (A), SHIELD	
52	*3-325-159-01	PLATE (B), SHIELD	
53	3-831-441-XX	CUSHION	
54	1-536-861-21	MOLD (B)	
55	X-3325-103-1	PLATE ASSY, HINGE	
56	7-627-850-08	SCREW, PRECISION +P 1.4X2	
57	*3-325-170-01	SHEET, SHIELD	
58	3-325-127-01	KNOB, CONTROL	

No.	Part No.	Description	Remarks
59	3-703-502-31	SCREW	
60	3-325-104-01	SHAFT (B), FITTING, CHASSIS	
61	3-703-816-02	SCREW (M1.4X2.0), SPECIAL HEAD	
62	*3-325-103-01	COVER, SWITCH	
63	3-325-129-11	PANEL, SIDE	
64	7-627-850-58	SCREW, PRECISION +P 1.4X3.5	
904	A-3015-373-A	MOUNTED PCB, AUDIO	

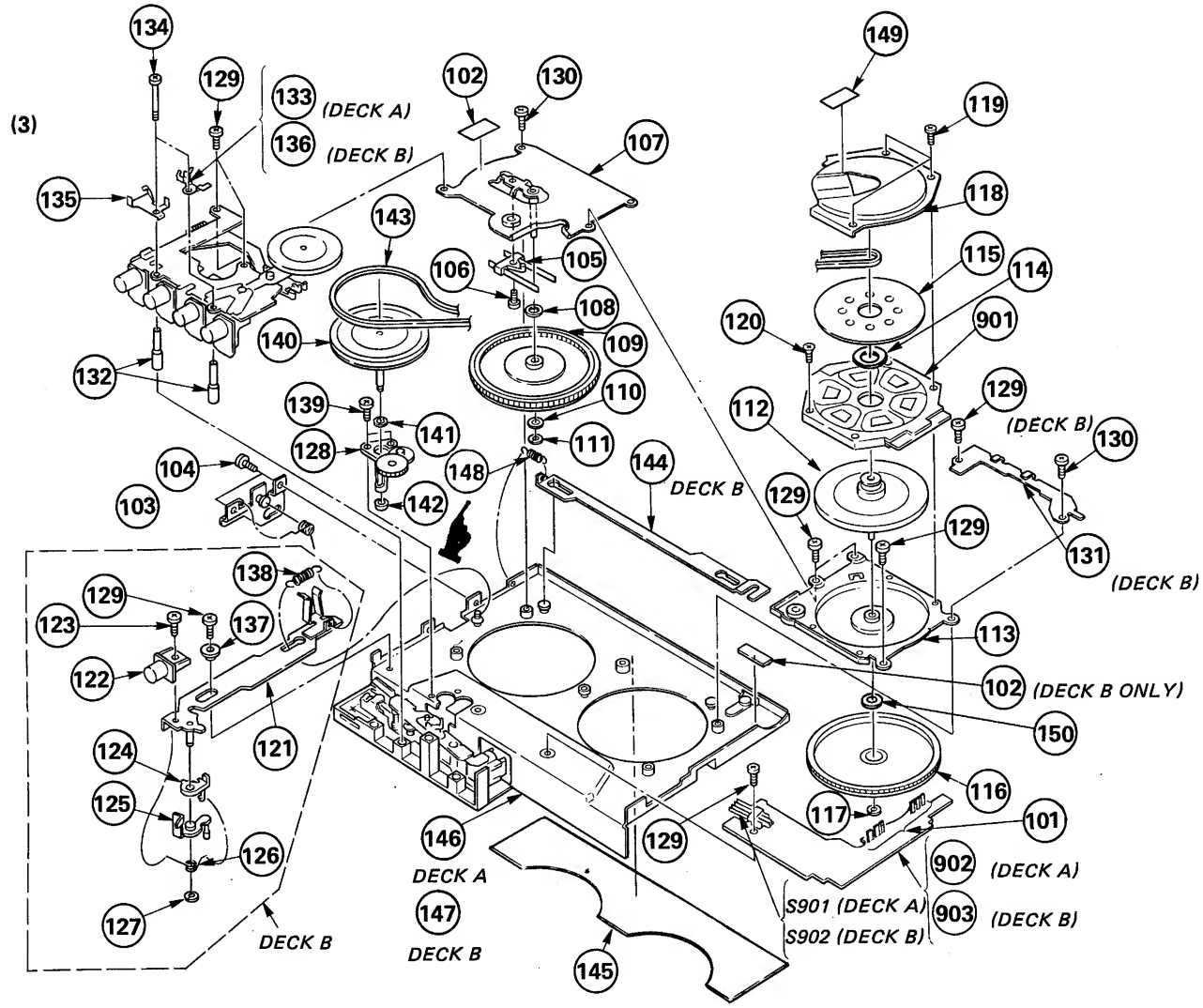

No.	Part No.	Description	Remarks
101	3-315-301-11	TERMINAL BOARD, MOTOR	
102	3-831-441-XX	CUSHION	
103	X-3325-111-1	STOPPER ASSY, T	
104	7-627-850-37	SCREW, PRECISION +P 1.4X1.4	
105	3-315-412-00	CONTACT, OUTSERT	
106	7-627-850-37	SCREW, PRECISION +P 1.4X1.4	
107	X-3315-314-0	CHASSIS ASSY, TAKE-UP REEL	
109	X-3315-315-0	GEAR ASSY, TAKE-UP REEL	
110	3-317-701-01	WASHER	
	3-317-701-11	WASHER	
111	3-315-384-01	WASHER, STOPPER (t=0.13)	
	3-315-384-11	WASHER, STOPPER (t=0.25)	
112	A-3133-205-A	WHEEL ASSY BLOCK ASSY, MOTOR	
113	A-3133-206-A	RIVETING ASSY, MOTOR SLEEVE	
114	3-315-332-01	SPACER (t=0.05)	
	3-315-332-11	SPACER (t=0.1)	
	3-315-332-21	SPACER (t=0.125)	
115	3-315-390-00	PLATE, HYSTERESIS	
116	3-324-546-01	GEAR (OUTSERT), REEL, SUPPLY	
117	3-315-384-01	WASHER, STOPPER (t=0.13)	
	3-315-384-11	WASHER, STOPPER (t=0.25)	
	3-315-384-21	WASHER, STOPPER (t=0.2)	
	3-315-384-31	WASHER, STOPPER (t=0.3)	
118	*3-315-419-00	PLATE, SHIELD	
119	3-315-485-01	SCRWE (M1.4X2.3), PRECISION	
120	3-317-706-01	SCREW (M1.4X2.3)	
121	X-3325-113-	LEVER ASSY, REC	
122	3-325-150-01	BUTTON, REC	
123	3-305-528-11	SCREW, STOPPER	
124	3-320-349-01	CLAW, REC LOCK	
125	X-3320-309-1	ARM ASSY, JOINT, E HEAD	
126	3-320-350-11	SPRING	
127	3-578-224-11	WASHER	

No.	Part No.	Description	Remarks
128	X-3315-343-1	SLEEVE COMP ASSY	
129	7-627-850-07	SCREW, PRECISION +P 1.4X2	
130	7-627-552-28	SCREW, PRECISION +P 1.7X2	
131	*3-325-155-01	CLAMP	
132	3-315-399-00	COLLAR, BUTTON	
133	*3-317-578-01	STOPPER, LEVER (C)	
134	3-325-171-01	SCREW	
135	3-308-557-00	(DECK A)....LUG, PLATE, DIA. 1.7	
	3-325-147-01	(DECK B)....RETAINER, LEAD	
136	3-320-420-01	STOPPER, FR LEVER (C)	
137	3-325-149-01	SPACER, LEVER, REC	
138	3-325-145-01	SPRING, TENSION	
139	7-627-850-78	PRECISION SCREW +P 1.4X1.8	
140	X-3317-508-1	FLYWHEEL ASSY	
141	3-315-495-01	WASHER (t=0.25)	
	3-315-495-11	WASHER (t=0.13)	
	3-315-495-21	WASHER (t=0.2)	
	3-315-495-31	WASHER (t=0.3)	
142	3-315-417-00	BUSHING, CAPSTAN	
143	3-315-405-00	BELT	
144	3-324-524-01	SLIDER, JOINT	
145	3-325-116-01	PLATE, ORNAMENTAL, CHASSIS	
146	A-3102-071-A	CHASSIS (A) BLOCK ASSY, REEL	
147	A-3102-072-A	CHASSIS (B) BLOCK ASSY, REEL	
148	3-324-520-01	SPRING, TENSION	
149	3-703-929-01	CUSHION (G)	
150	3-317-702-01	SPACER (D)(t=0.13)	
	3-317-702-11	SPACER (D)(t=0.2)	
	3-317-702-21	SPACER (D)(t=0.25)	
901	1-462-225-11	COIL, MOTOR (STATOR)	
902	A-3065-051-A	MOUNTED PCB (A), SERVO	
903	A-3065-052-A	MOUNTED PCB (B), SERVO	

(4)

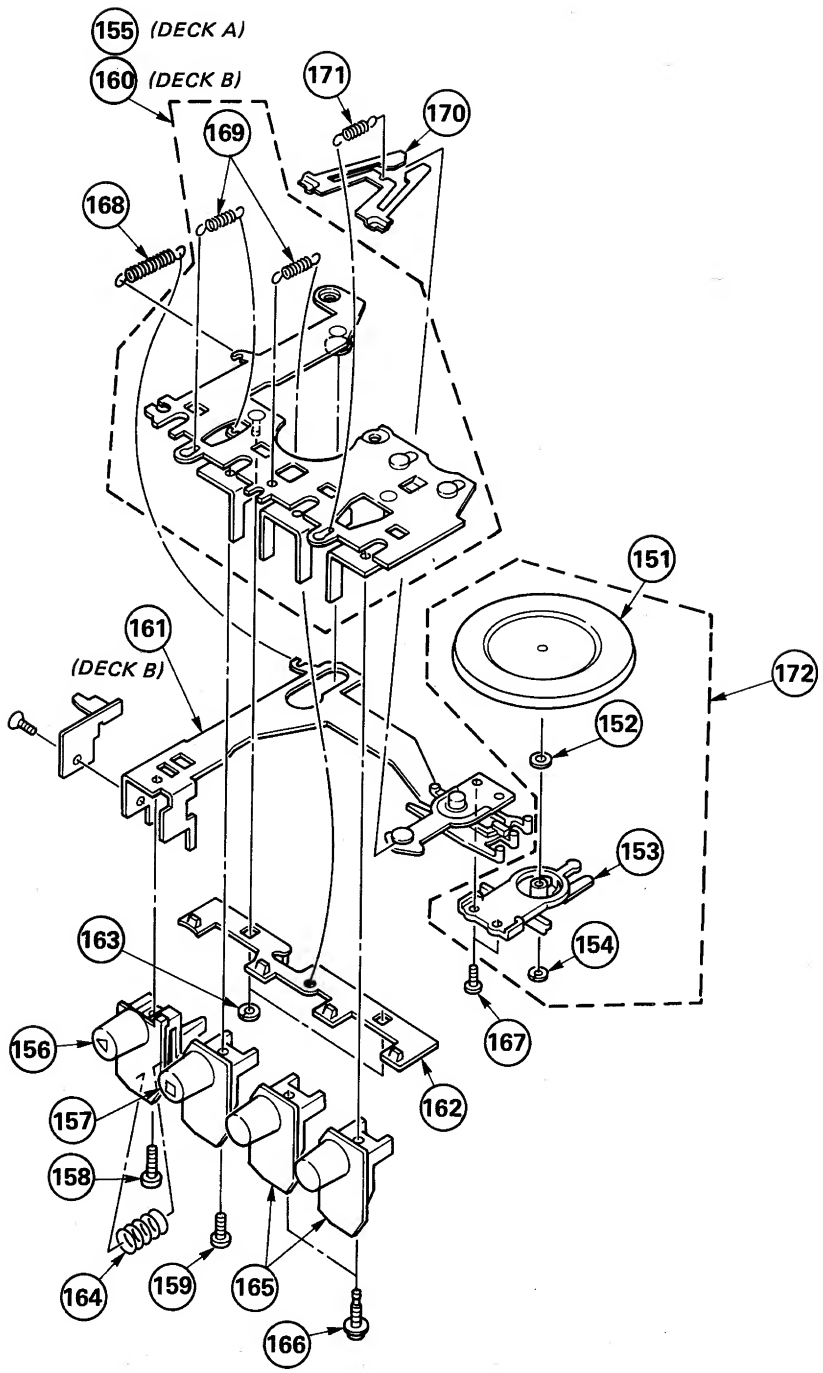

No.	Part No.	Description	Remarks
151	X-3315-308-0	WHEEL ASSY, REVERSE	
152	3-315-415-00	WASHER 1.5 DIA.(t=0.075)	
	3-315-415-11	WASHER 2.3 DIA.(t=0.1)	
	3-315-416-00	WASHER 1.2 DIA.(t=0.1)	
	3-315-416-21	WASHER 2.5 DIA.(t=0.188)	
153	X-3315-307-0	LEVER (B) ASSY, FR	
154	3-315-414-00	WASHER (t=0.25)	
	3-315-414-11	WASHER (t=0.188)	
	3-315-414-21	WASHER (t=0.13)	
155	X-3315-360-1	PLATE ASSY, CONTROL	
156	3-325-139-01	BUTTON, PLAY	
157	3-325-142-01	BUTTON, STOP	
158	3-305-528-21	SCREW, STOPPER	
159	3-305-528-11	SCREW, STOPPER	

No.	Part No.	Description	Remarks
160	X-3324-505-1	PLATE ASSY, CONTROL	
161	X-3325-117-1	LEVER ASSY, PLAY	
162	*X-3315-304-5	PLATE ASSY, LOCK	
163	3-315-384-41	WASHER, STOPPER	
164	3-315-331-00	SPRING, COMPRESSION	
165	3-325-140-01	BUTTON, FF/REW	
166	3-315-395-00	SCREW, BUTTON	
167	7-627-551-47	SCREW, PRECISION +P 1.4X1.4	
168	3-315-341-00	SPRING, TENSION (POWER TENSION)	
169	3-315-343-00	SPRING, TENSION (POWER TENSION)	
170	3-315-396-00	LEVER (C), F.R	
171	3-315-397-00	SPRING, TENSION (POWER TENSION)	
172	A-3125-002-A	WHEEL BLOCK ASSY, REVERSE	

(5) DECK B

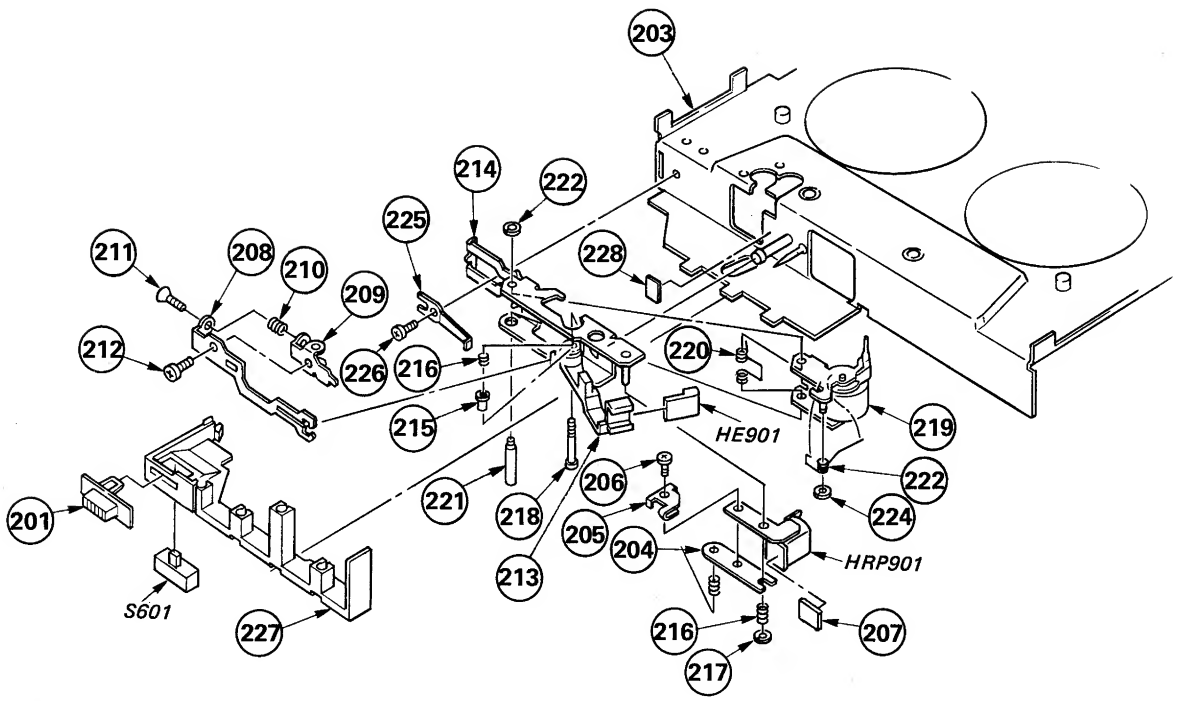

No.	Part No.	Description	Remarks
201	3-325-126-01	KNOB, PAUSE	
204	3-324-541-01	PLATE, BASE, HEAD	
205	3-324-531-01	CLAMP	
206	7-627-850-37	SCREW, PRECISION +P 1.4X1.4	
208	3-320-343-01	JOINT (A), E HEAD	
209	3-320-344-01	JOINT (B), E HEAD	
210	3-320-352-01	SPRING, COMPRESSION	
211	7-627-451-28	SCREW, PRECISION +K 1.4X3	
212	3-703-816-01	SCREW (M1.4X2.0), SPECIAL HEAD	
213	3-324-543-01	ARM, HEAD, E	
214	X-3324-507-1	CHASSIS ASSY, HEAD	
215	3-324-551-01	SHAFT (B), ARM, E HEAD	

No.	Part No.	Description	Remarks
216	3-324-542-01	SPRING, COMPRESSION	
217	3-324-544-01	WASHER (DIA. 2.3-1)	
218	3-324-540-01	SCREW, ADJUSTMENT, AZIMUTH	
219	X-3325-110-1	PINCH LEVER ASSY	
220	3-315-394-00	SPRING	
221	3-315-393-00	SHAFT, PINCH LEVER	
222	3-315-384-11	WASHER, STOPPER (t=0.25)	
223	3-315-357-00	SPRING	
224	3-315-384-31	WASHER, STOPPER (t=0.3)	
225	3-315-406-00	SPRING	
226	7-627-850-37	SCREW, PRECISION +P 1.4X1.4	
227	3-325-144-01	GUIDE, BUTTON	

(6) DECK A

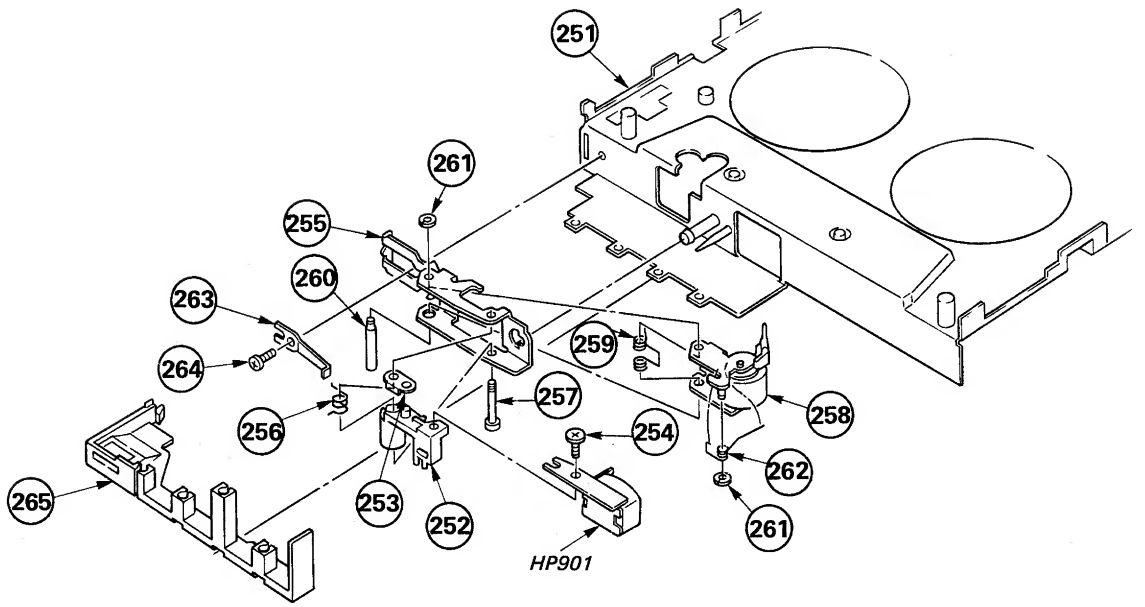

No.	Part No.	Description	Remarks
251	A-3163-080-A	CHASSIS BLOCK ASSY, T REEL	
252	3-315-430-00	TABLE, HEAD	
253	3-315-463-00	PLATE, GROUND, HEAD	
254	3-315-484-02	SCREW (M2X3), HEAD, WASHER	
255	3-315-431-00	CHASSIS, HEAD	
256	3-315-391-00	SPRING	
257	3-315-392-00	SCREW, ADJUSTMENT	
258	X-3325-110-1	PINCH LEVER ASSY	
259	3-315-394-00	SPRING	
260	3-315-393-00	SHAFT, PINCH LEVER	
261	3-315-384-41	WASHER, STOPPER	
262	3-315-357-00	SPRING	
263	3-315-406-00	SPRING	
264	7-627-850-37	SCREW, PRECISION +P 1.4X1.4	
265	3-325-144-01	GUIDE, BUTTON	

SECTION 6
ELECTRICAL PARTS LIST

NOTE:
- Items marked " * " are not stocked since they are seldom required for routine service. Some delay should be anticipated when ordering these items.
- If there are two or more same circuitsin a set such as a stereophonic machine, only typical circuit parts may be indicated and capacitors and resistors in other same circuits may be omitted.

CAPACITORS:
MF:μF, PF:μμF.

RESISTORS
- All resistors are in ohms.
- F : nonflammable

COILS
- MMH : mH, UH : μH

SEMICONDUCTORS
In each case, U : μ, for example:
UA...: μA..., UPA...: μPA..., UPC...: μPC, UPD...: μPD...

ELECTRICAL PARTS

Ref.No.	Part No.	Description		
901	1-462-225-11	COIL, MOTOR (STATOR)		
902	A-3065-051-A	MOUNTED PCB (A), SERVO		
903	A-3065-052-A	MOUNTED PCB (B), SERVO		
904	A-3015-373-A	MOUNTED PCB, AUDIO		
C101	1-163-139-00	CERAMIC CHIP 820PF	10%	50V
C102	1-163-016-00	CERAMIC CHIP 0.0039MF	10%	50V
C103	1-135-104-00	TANTAL. CHIP 10MF	20%	4V
C104	1-135-103-00	TANTAL. CHIP 3.3MF	20%	4V
C105	1-163-021-00	CERAMIC CHIP 0.01MF	5%	50V
C106	1-163-021-00	CERAMIC CHIP 0.01MF	5%	50V
C107	1-135-073-00	TANTAL. CHIP 0.33MF	10%	35V
C108	1-135-087-21	TANTAL. CHIP 0.68MF	10%	20V
C109	1-135-070-00	TANTAL. CHIP 0.1MF	10%	35V
C110	1-135-091-00	TANTAL. CHIP 1MF	20%	16V
C111	1-135-091-00	TANTAL. CHIP 1MF	20%	16V
C112	1-163-054-00	CERAMIC CHIP 0.0039MF	10%	50V
C113	1-135-091-00	TANTAL. CHIP 1MF	20%	16V
C114	1-124-576-11	ELECT 220MF	20%	4V
C115	1-135-091-00	TANTAL. CHIP 1MF	20%	16V
C116	1-163-015-00	CERAMIC CHIP 0.0033MF	10%	50V
C117	1-124-499-11	ELECT 1MF	20%	50V
C118	1-163-017-00	CERAMIC CHIP 0.0047MF	10%	50V
C119	1-163-141-00	CERAMIC CHIP 0.001MF	10%	50V
C120	1-124-431-00	ELECT 33MF	20%	4V
C121	1-163-015-00	CERAMIC CHIP 0.0033MF	10%	50V
C122	1-163-810-00	CERAMIC CHIP 0.03MF	10%	25V
C123	1-135-091-00	TANTAL. CHIP 1MF	20%	16V
C124	1-135-091-00	TANTAL. CHIP 1MF	20%	16V
C125	1-163-021-00	CERAMIC CHIP 0.01MF	5%	50V
C126	1-163-081-00	CERAMIC CHIP 0.22MF		25V
C201	1-163-139-00	CERAMIC CHIP 820PF	10%	50V
C202	1-163-016-00	CERAMIC CHIP 0.0039MF	10%	50V
C203	1-135-104-00	TANTAL. CHIP 10MF	20%	4V
C204	1-135-103-00	TANTAL. CHIP 3.3MF	20%	4V
C205	1-163-021-00	CERAMIC CHIP 0.01MF	5%	50V
C206	1-163-021-00	CERAMIC CHIP 0.01MF	5%	50V
C207	1-135-073-00	TANTAL. CHIP 0.33MF	10%	35V
C208	1-135-087-21	TANTAL. CHIP 0.68MF	10%	20V
C209	1-135-070-00	TANTAL. CHIP 0.1MF	10%	35V
C210	1-135-091-00	TANTAL. CHIP 1MF	20%	16V
C211	1-135-091-00	TANTAL. CHIP 1MF	20%	16V
C212	1-163-054-00	CERAMIC CHIP 0.0039MF	10%	50V
C213	1-135-091-00	TANTAL. CHIP 1MF	20%	16V
C214	1-124-576-11	ELECT 220MF	20%	4V
C215	1-135-091-00	TANTAL. CHIP 1MF	20%	16V
C216	1-163-015-00	CERAMIC CHIP 0.0033MF	10%	50V

ELECTRICAL PARTS

Ref.No.	Part No.	Description		
C217	1-124-499-11	ELECT 1MF	20%	50V
C218	1-163-017-00	CERAMIC CHIP 0.0047MF	10%	50V
C219	1-163-141-00	CERAMIC CHIP 0.001MF	10%	50V
C220	1-135-105-00	TANTAL. CHIP 33MF	20%	4V
C221	1-163-015-00	CERAMIC CHIP 0.0033MF	10%	50V
C222	1-163-810-00	CERAMIC CHIP 0.03MF	10%	25V
C223	1-135-091-00	TANTAL. CHIP 1MF	20%	16V
C224	1-135-091-00	TANTAL. CHIP 1MF	20%	16V
C225	1-163-059-00	CERAMIC CHIP 0.01MF	10%	50V
C226	1-163-081-00	CERAMIC CHIP 0.22MF		25V
C301	1-163-141-00	CERAMIC CHIP 0.001MF	10%	50V
C302	1-135-105-00	TANTAL. CHIP 33MF	20%	4V
C303	1-124-576-11	ELECT 220MF	20%	4V
C305	1-135-103-00	TANTAL. CHIP 3.3MF	20%	4V
C306	1-124-430-00	ELECT 22MF	20%	4V
C307	1-124-431-00	ELECT 33MF	20%	4V
C308	1-135-091-00	TANTAL. CHIP 1MF	20%	16V
C309	1-131-393-00	TANTALUM 47MF	20%	3.15V
C310	1-163-021-00	CERAMIC CHIP 0.01MF	5%	50V
C311	1-124-433-00	ELECT 100MF	20%	4V
C312	1-131-389-00	TANTALUM 10MF	20%	3.15V
C313	1-131-389-00	TANTALUM 10MF	20%	3.15V
C314	1-124-430-00	ELECT 22MF	20%	4V
C315	1-135-104-00	TANTAL. CHIP 10MF	20%	4V
C316	1-124-430-00	ELECT 22MF	20%	4V
C317	1-135-103-00	TANTAL. CHIP 3.3MF	20%	4V
C318	1-131-393-00	TANTALUM 47MF	20%	3.15V
C319	1-163-013-00	CERAMIC CHIP 0.0022MF	10%	50V
C322	1-163-117-00	CERAMIC CHIP 100PF	5%	50V
C323	1-163-013-00	CERAMIC CHIP 0.0022MF	10%	50V
C324	1-163-036-00	CERAMIC CHIP 0.068MF		50V
C325	1-124-432-00	ELECT 47MF	20%	4V
C326	1-135-073-00	TANTAL. CHIP 0.33MF	10%	35V
C327	1-135-104-00	TANTAL. CHIP 10MF	20%	4V
C328	1-135-104-00	TANTAL. CHIP 10MF	20%	4V
C329	1-135-103-00	TANTAL. CHIP 3.3MF	20%	4V
C330	1-135-103-00	TANTAL. CHIP 3.3MF	20%	4V
C331	1-124-576-11	ELECT 220MF	20%	4V
C333	1-163-141-00	CERAMIC CHIP 0.001MF	10%	50V
C334	1-163-021-00	CERAMIC CHIP 0.01MF	5%	50V
C601	1-163-810-00	CERAMIC CHIP 0.03MF	10%	25V
C602	1-163-810-00	CERAMIC CHIP 0.03MF	10%	25V
C603	1-135-070-00	TANTAL. CHIP 0.1MF	10%	35V
C604	1-163-023-00	CERAMIC CHIP 0.015MF	10%	50V
C605	1-135-070-00	TANTAL. CHIP 0.1MF	10%	35V

ELECTRICAL PARTS

Ref.No.	Part No.	Description		
C606	1-135-087-21	TANTAL. CHIP 0.68MF	10%	20V
C607	1-135-071-21	TANTAL. CHIP 0.15MF	10%	35V
C608	1-135-104-00	TANTAL. CHIP 10MF	20%	4V
C609	1-135-091-00	TANTAL. CHIP 1MF	20%	16V
C610	1-163-021-00	CERAMIC CHIP 0.01MF	5%	50V
C611	1-135-104-00	TANTAL. CHIP 10MF	20%	4V
C701	1-163-810-00	CERAMIC CHIP 0.03MF	10%	25V
C702	1-163-810-00	CERAMIC CHIP 0.03MF	10%	25V
C703	1-135-070-00	TANTAL. CHIP 0.1MF	10%	35V
C704	1-163-023-00	CERAMIC CHIP 0.015MF	10%	50V
C705	1-135-070-00	TANTAL. CHIP 0.1MF	10%	35V
C706	1-135-087-21	TANTAL. CHIP 0.68MF	10%	20V
C707	1-135-071-21	TANTAL. CHIP 0.15MF	10%	35V
C708	1-135-104-00	TANTAL. CHIP 10MF	20%	4V
C709	1-135-091-00	TANTAL. CHIP 1MF	10%	16V
C710	1-163-021-00	CERAMIC CHIP 0.01MF	5%	50V
C711	1-135-104-00	TANTAL. CHIP 10MF	10%	4V
CNJ301	1-507-951-11	JACK, EXTERNAL POWER		
D302	8-719-901-35	DIODE SLP135B		
D303	8-719-100-05	DIODE 1S2837		
D304	8-719-815-55	DIODE 1S1555		
D305	8-719-100-05	DIODE 1S2837		
HE901	8-825-581-10	HEAD, E		
HP901	8-825-507-11	HEAD (PP227-3602H)		
HRP	8-825-533-40	HEAD, (PP217-6202G)		
IC301	8-759-910-18	IC BA3304F		
IC302	8-759-908-06	IC CX20085		
IC303	8-759-201-57	IC TA7688F		
IC304	8-759-907-36	IC CX20023		
IC601	8-752-012-32	IC CX20123		
IC701	8-752-012-32	IC CX20123		
J301	1-507-917-00	JACK, STEREO		
J302	1-507-999-11	JACK		
JR1	1-216-295-00	METAL CHIP 0	5%	1/10W
JR2	1-216-296-00	METAL CHIP 0	5%	1/8W
JR4	1-216-295-00	METAL CHIP 0	5%	1/10W
JR5	1-216-296-00	METAL CHIP 0	5%	1/8W
JR6	1-216-296-00	METAL CHIP 0	5%	1/8W
JR7	1-216-296-00	METAL CHIP 0	5%	1/8W
JR601	1-216-295-00	METAL CHIP 0	5%	1/10W
JR602	1-216-296-00	METAL CHIP 0	5%	1/8W
JR603	1-216-296-00	METAL CHIP 0	5%	1/8W
JR701	1-216-295-00	METAL CHIP 0	5%	1/10W
JR702	1-216-296-00	METAL CHIP 0	5%	1/8W
JR703	1-216-296-00	METAL CHIP 0	5%	1/8W
Q302	8-729-800-68	TRANSISTOR 2SB815		
Q303	8-729-100-66	TRANSISTOR 2SC1623		
Q304	8-729-900-98	TRANSISTOR DTC143TK		
Q305	8-729-800-68	TRANSISTOR 2SB815		
Q306	8-729-800-68	TRANSISTOR 2SB815		
Q307	8-729-100-66	TRANSISTOR 2SC1623		

ELECTRICAL PARTS

Ref.No.	Part No.	Description		
Q308	8-729-100-66	TRANSISTOR 2SC1623		
Q309	8-729-100-66	TRANSISTOR 2SC1623		
Q310	8-729-900-52	TRANSISTOR DTC114YK		
Q312	8-729-159-64	TRANSISTOR 2SD596		
Q313	8-729-900-98	TRANSISTOR DTC143TK		
Q316	8-729-216-22	TRANSISTOR 2SA1162Y		
Q317	8-729-216-22	TRANSISTOR 2SA1162Y		
Q318	8-729-216-22	TRANSISTOR 2SA1162Y		
Q319	8-729-216-22	TRANSISTOR 2SA1162Y		
Q320	8-729-901-46	TRANSISTOR DTA114YK		
Q321	8-729-900-52	TRANSISTOR DTC114YK		
Q322	8-729-900-98	TRANSISTOR DTC143TK		
Q323	8-729-100-66	TRANSISTOR 2SC1623		
Q324	8-729-800-68	TRANSISTOR 2SB815		
Q325	8-729-900-98	TRANSISTOR DTC143TK		
Q326	8-729-900-98	TRANSISTOR DTC143TK		
Q327	8-729-900-52	TRANSISTOR DTC114YK		
Q328	8-729-900-52	TRANSISTOR DTC114YK		
Q601	8-729-800-68	TRANSISTOR 2SB815		
Q602	8-729-100-66	TRANSISTOR 2SC1623		
Q603	8-729-162-44	TRANSISTOR 2SB624-BV4		
Q604	8-729-100-66	TRANSISTOR 2SC1623		
Q606	8-729-100-66	TRANSISTOR 2SC1623		
Q607	8-729-100-66	TRANSISTOR 2SC1623		
Q608	8-729-900-52	TRANSISTOR DTC114YK		
Q609	8-729-216-22	TRANSISTOR 2SA1162		
Q701	8-729-800-68	TRANSISTOR 2SB815		
Q702	8-729-100-66	TRANSISTOR 2SC1623		
Q703	8-729-162-44	TRANSISTOR 2SB624-BV4		
Q704	8-729-100-66	TRANSISTOR 2SC1623		
Q706	8-729-100-66	TRANSISTOR 2SC1623		
Q707	8-729-100-66	TRANSISTOR 2SC1623		
Q708	8-729-900-52	TRANSISTOR DTC114YK		
Q709	8-729-216-22	TRANSISTOR 2SA1162		
R101	1-216-089-00	METAL CHIP 47K	5%	1/10W
R102	1-216-087-00	METAL CHIP 39K	5%	1/10W
R103	1-216-087-00	METAL CHIP 39K	5%	1/10W
R104	1-216-117-00	METAL CHIP 680K	5%	1/10W
R105	1-216-101-00	METAL CHIP 150K	5%	1/10W
R106	1-216-198-00	METAL CHIP 1K	5%	1/8W
R107	1-216-073-00	METAL CHIP 10K	5%	1/10W
R108	1-216-073-00	METAL CHIP 10K	5%	1/10W
R109	1-216-057-00	METAL CHIP 2.2K	5%	1/10W
R110	1-216-052-00	METAL CHIP 1.3K	5%	1/10W
R111	1-216-075-00	METAL CHIP 12K	5%	1/10W
R112	1-216-099-00	METAL CHIP 120K	5%	1/10W
R113	1-216-202-00	METAL CHIP 1.5K	5%	1/8W
R114	1-216-298-00	METAL CHIP 2.2	5%	1/10W
R115	1-216-009-00	METAL CHIP 22	5%	1/10W
R116	1-216-049-00	METAL CHIP 1K	5%	1/10W
R117	1-216-037-00	METAL CHIP 330	5%	1/10W
R118	1-216-096-00	METAL CHIP 91K	5%	1/10W
R119	1-216-063-00	METAL CHIP 3.9K	5%	1/10W
R120	1-216-065-00	METAL CHIP 4.7K	5%	1/10W
R121	1-216-073-00	METAL CHIP 10K	5%	1/10W
R122	1-216-043-00	METAL CHIP 560	5%	1/10W
R123	1-216-097-00	METAL CHIP 100K	5%	1/10W
R124	1-216-064-00	METAL CHIP 4.3K	5%	1/10W

ELECTRICAL PARTS

Ref.No.	Part No.	Description			
R201	1-216-089-00	METAL CHIP	47K	5%	1/10W
R202	1-216-087-00	METAL CHIP	39K	5%	1/10W
R203	1-216-087-00	METAL CHIP	39K	5%	1/10W
R204	1-216-117-00	METAL CHIP	680K	5%	1/10W
R205	1-216-101-00	METAL CHIP	150K	5%	1/10W
R206	1-216-198-00	METAL CHIP	1K	5%	1/8W
R207	1-216-073-00	METAL CHIP	10K	5%	1/10W
R208	1-216-073-00	METAL CHIP	10K	5%	1/10W
R209	1-216-206-00	METAL CHIP	2.2K	5%	1/8W
R210	1-216-052-00	METAL CHIP	1.3K	5%	1/10W
R211	1-216-075-00	METAL CHIP	12K	5%	1/10W
R212	1-216-099-00	METAL CHIP	120K	5%	1/10W
R213	1-216-202-00	METAL CHIP	1.5K	5%	1/8W
R214	1-216-298-00	METAL CHIP	2.2	5%	1/10W
R215	1-216-009-00	METAL CHIP	22	5%	1/10W
R216	1-216-049-00	METAL CHIP	1K	5%	1/10W
R217	1-216-037-00	METAL CHIP	330	5%	1/10W
R218	1-216-096-00	METAL CHIP	91K	5%	1/10W
R219	1-216-063-00	METAL CHIP	3.9K	5%	1/10W
R220	1-216-065-00	METAL CHIP	4.7K	5%	1/10W
R221	1-216-073-00	METAL CHIP	10K	5%	1/10W
R222	1-216-043-00	METAL CHIP	560	5%	1/10W
R223	1-216-097-00	METAL CHIP	100K	5%	1/10W
R224	1-216-064-00	METAL CHIP	4.3K	5%	1/10W
R301	1-216-001-00	METAL CHIP	10	5%	1/10W
R302	1-216-057-00	METAL CHIP	2.2K	5%	1/10W
R303	1-216-073-00	METAL CHIP	10K	5%	1/10W
R305	1-216-053-00	METAL CHIP	1.5K	5%	1/10W
R306	1-216-089-00	METAL CHIP	47K	5%	1/10W
R307	1-216-198-00	METAL CHIP	1K	5%	1/8W
R308	1-216-282-00	METAL CHIP	3.3M	5%	1/8W
R309	1-216-055-00	METAL CHIP	1.8K	5%	1/10W
R310	1-216-089-00	METAL CHIP	47K	5%	1/10W
R311	1-216-073-00	METAL CHIP	10K	5%	1/10W
R312	1-216-077-00	METAL CHIP	15K	5%	1/10W
R313	1-216-081-00	METAL CHIP	22K	5%	1/10W
R314	1-216-073-00	METAL CHIP	10K	5%	1/10W
R315	1-216-308-00	METAL CHIP	4.7	5%	1/10W
R316	1-216-001-00	METAL CHIP	10	5%	1/10W
R317	1-216-009-00	METAL CHIP	22	5%	1/10W
R320	1-216-055-00	METAL CHIP	1.8K	5%	1/10W
R321	1-216-037-00	METAL CHIP	330	5%	1/10W
R322	1-216-081-00	METAL CHIP	22K	5%	1/10W
R323	1-216-097-00	METAL CHIP	100K	5%	1/10W
R324	1-216-073-00	METAL CHIP	10K	5%	1/10W
R325	1-216-081-00	METAL CHIP	22K	5%	1/10W
R326	1-216-089-00	METAL CHIP	47K	5%	1/10W
R327	1-216-049-00	METAL CHIP	1K	5%	1/10W
R328	1-216-105-00	METAL CHIP	220K	5%	1/10W
R329	1-216-049-00	METAL CHIP	1K	5%	1/10W
R330	1-216-105-00	METAL CHIP	220K	5%	1/10W
R332	1-216-064-00	METAL CHIP	4.3K	5%	1/10W
R335	1-216-073-00	METAL CHIP	10K	5%	1/10W
R337	1-216-057-00	METAL CHIP	2.2K	5%	1/10W

ELECTRICAL PARTS

Ref.No.	Part No.	Description			
R601	1-216-097-00	METAL CHIP	100K	5%	1/10W
R602	1-216-057-00	METAL CHIP	2.2K	5%	1/10W
R603	1-216-001-00	METAL CHIP	10	5%	1/10W
R604	1-216-101-00	METAL CHIP	150K	5%	1/10W
R605	1-216-049-00	METAL CHIP	1K	5%	1/10W
R606	1-216-097-00	METAL CHIP	100K	5%	1/10W
R607	1-216-057-00	METAL CHIP	2.2K	5%	1/10W
R608	1-216-001-00	METAL CHIP	10	5%	1/10W
R609	1-216-101-00	METAL CHIP	150K	5%	1/10W
R610	1-216-049-00	METAL CHIP	1K	5%	1/10W
R611	1-216-049-00	METAL CHIP	1K	5%	1/10W
R612	1-216-091-00	METAL CHIP	56K	5%	1/10W
R614	1-216-073-00	METAL CHIP	10K	5%	1/10W
R615	1-216-073-00	METAL CHIP	10K	5%	1/10W
R616	1-216-085-00	METAL CHIP	33K	5%	1/10W
R617	1-216-083-00	METAL CHIP	27K	5%	1/10W
R618	1-216-226-00	METAL CHIP	15K	5%	1/8W
R619	1-216-089-00	METAL CHIP	47K	5%	1/10W
R620	1-216-057-00	METAL CHIP	2.2K	5%	1/10W
R621	1-216-065-00	METAL CHIP	4.7K	5%	1/10W
R622	1-216-073-00	METAL CHIP	10K	5%	1/10W
R623	1-216-073-00	METAL CHIP	10K	5%	1/10W
R624	1-216-121-00	METAL CHIP	1M	5%	1/10W
R625	1-216-089-00	METAL CHIP	47K	5%	1/10W
R626	1-216-053-00	METAL CHIP	1.5K	5%	1/10W
R627	1-216-097-00	METAL CHIP	100K	5%	1/10W
R629	1-216-073-00	METAL CHIP	10K	5%	1/10W
R701	1-216-097-00	METAL CHIP	100K	5%	1/10W
R702	1-216-057-00	METAL CHIP	2.2K	5%	1/10W
R703	1-216-001-00	METAL CHIP	10	5%	1/10W
R704	1-216-101-00	METAL CHIP	150K	5%	1/10W
R705	1-216-049-00	METAL CHIP	1K	5%	1/10W
R706	1-216-097-00	METAL CHIP	100K	5%	1/10W
R707	1-216-057-00	METAL CHIP	2.2K	5%	1/10W
R708	1-216-001-00	METAL CHIP	10	5%	1/10W
R709	1-216-101-00	METAL CHIP	150K	5%	1/10W
R710	1-216-049-00	METAL CHIP	1K	5%	1/10W
R711	1-216-049-00	METAL CHIP	1K	5%	1/10W
R712	1-216-091-00	METAL CHIP	56K	5%	1/10W
R714	1-216-073-00	METAL CHIP	10K	5%	1/10W
R715	1-216-073-00	METAL CHIP	10K	5%	1/10W
R716	1-216-085-00	METAL CHIP	33K	5%	1/10W
R717	1-216-083-00	METAL CHIP	27K	5%	1/10W
R718	1-216-226-00	METAL CHIP	15K	5%	1/8W
R719	1-216-089-00	METAL CHIP	47K	5%	1/10W
R720	1-216-057-00	METAL CHIP	2.2K	5%	1/10W
R721	1-216-065-00	METAL CHIP	4.7K	5%	1/10W
R722	1-216-073-00	METAL CHIP	10K	5%	1/10W
R723	1-216-073-00	METAL CHIP	10K	5%	1/10W
R724	1-216-121-00	METAL CHIP	1M	5%	1/10W
R725	1-216-089-00	METAL CHIP	47K	5%	1/10W
R726	1-216-053-00	METAL CHIP	1.5K	5%	1/10W
R727	1-216-097-00	METAL CHIP	100K	5%	1/10W
R729	1-216-073-00	METAL CHIP	10K	5%	1/10W

ELECTRICAL PARTS

Ref.No.	Part No.	Description
RV101	1-230-602-11	RES, ADJ, METAL GLAZE 4.7K
RV201	1-230-602-11	RES, ADJ, METAL GLAZE 4.7K
RV301	1-230-729-11	RES, VAR, CARBON 10K/10K
RV601	1-230-736-11	RES, ADJ, METAL GLAZE 10K
RV701	1-230-736-11	RES, ADJ, METAL GLAZE 10K
S301	1-554-671-00	SWITCH, SLIDE (EQ)
S302	1-570-131-21	SWITCH, SLIDE (DOLBY)
S303	1-570-246-11	SWITCH, SLIDE (REC/PB)
S601	1-554-612-00	SWITCH, SLIDE (PAUSE)
S701	1-554-586-00	SWITCH, LEAF
S901	1-554-586-00	SWITCH, LEAF
T301	1-433-251-00	TRANSFORMER, BIAS OSCILLATOR

ACCESSORY & PACKING MATERIAL

Part No.	Description
1-542-071-11	MICROPHONE (C-3001)
3-325-174-01	(US).....INDIVIDUAL CARTON
3-325-175-01	(AEP,Canadian,UK)...INDIVIDUAL CARTON
3-325-164-01	CASE (B), CARRYING
3-325-165-01	CASE (A), CARRYING
3-325-178-01	CASE, ACCESSORY
3-527-213-00	LABEL, SERIAL NUMBER
*3-701-999-00	LABEL, SERIAL NUMBER
*3-703-710-01	STICKER, SONY SYMBOL (12)
3-760-386-11	(AEP,UK).....MANUAL, INSTRUCTION
3-760-386-21	(US,Canadian)...MANUAL, INSTRUCTION
3-760-386-31	(Canadian).....MANUAL, INSTRUCTION
3-760-386-51	(AEP).....MANUAL, INSTRUCTION
3-795-748-21	SAFETY INSTRUCTIONS, HEADPHONE
7-633-110-41	TAPE (50MMX500M)
8-952-220-90	MDR-A20
X-3324-513-1	STAND ASSY, MICROPHONE

9-951-708-11
(Including 9-951-708-91, -93)

English
85F04104-1
Printed in Japan
© 1985